cameo

PRODUCT CATALOGUE 2026



DESIGNED & ENGINEERED IN GERMANY

cameolight.com

for lumen beings



Cameo® is a registered brand of the Adam Hall Group.

adam hall®

SOUND TECHNOLOGY
LIGHT TECHNOLOGY
STAGE EQUIPMENT
HARDWARE FOR FLIGHTCASES

ADAM HALL GROUP BRANDS

LD systems · cameo · Gravity · Palmer · DEFENDER · adam hall

DEVELOPED IN GERMANY. DESIGNED FOR LUMEN BEINGS.

50 YEARS OF INDUSTRY EXPERIENCE

Cameo is part of the Adam Hall Group, which has been shaping the event industry for over 50 years. With more than 15 years of experience in professional lighting technology, we combine in-depth industry knowledge with genuine customer focus – for products that meet practical requirements and deliver impressive performance.

DESIGNED & ENGINEERED IN GERMANY

Our products are developed in our own Light Lab in Neu-Anspach, Germany – from the initial idea to the final test. State-of-the-art measurement technology — including our in-house goniophotometer — paired with rigorous real-life testing ensures outstanding durability, precision and long-term stability.

PROVEN ON GLOBAL STAGES

Cameo products are used on the world‘s biggest stages, festivals and productions. Lighting professionals value them for their reliability, performance and striking design. Our references show where Cameo is already in the spotlight today.

cameolight.com

OUTDOOR MOVING LIGHTS

INDOOR MOVING LIGHTS	31
OUTDOOR STATIC LIGHTS	66
INDOOR STATIC LIGHTS	116
SHOW LASERS & EFFECTS	178
ARCHITECTURAL OUTDOOR LIGHTS	202
ARCHITECTURAL INDOOR LIGHTS	212
LIGHTING TOOLS	230
ICON LEGEND / REGISTER	256



I love Reggeaton ©Raul Barcia, Germany 2025



OPUS® X4 PROFILE IP

IP65 1400 W LED PROFILE MOVING HEAD

- High-performance outdoor moving head with 1,400 W LED white light engine
- High luminous flux with 50,000 lm
- Wide zoom range: 5°-50°
- Enhanced CMY colour mixing with linear CTO correction
- Creative colour transitions with two colour wheels
- Variety of effects with two gobo wheels + animation wheel
- Fully closable framing ±60° for precise beam shaping
- Iris + 2 × frost filters
- Flexible control options via DMX/RDM, Art-Net, sACN, W-DMX, and CRMX
- Including touring case insert to protect against impacts



Note: The values given are preliminary.

CLOX4PIP

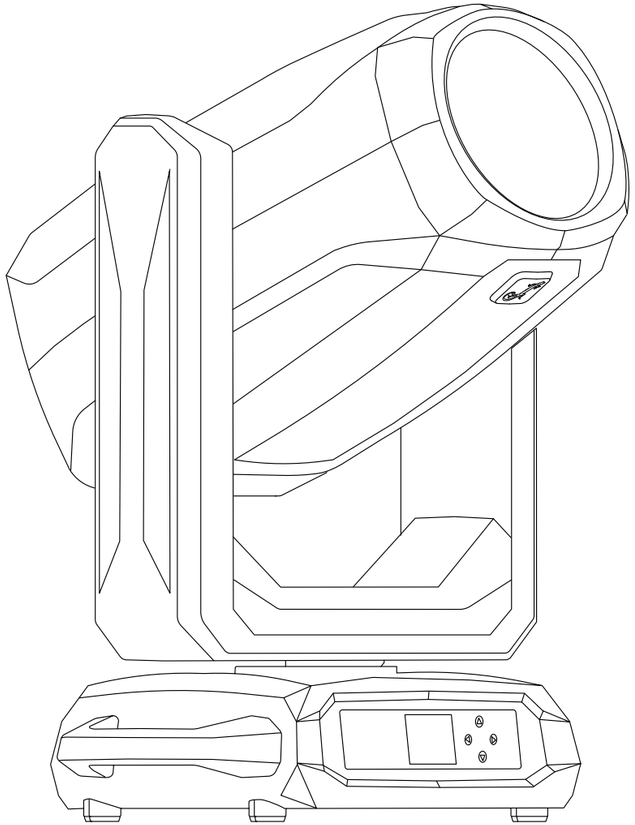

OPUS® H6 IP

IP65 HYBRID MOVING HEAD

- IP65 Hybrid Moving Head with 600 W single white LED
- Versatile application (Beam, Spot, Wash)
- 21,000 lm output – perfect for large venues
- CRI >85 for accurate, natural colour rendering
- Endless pan rotation & wide zoom range from 2.4° - 53°
- 4 prisms on 2 layers for creative aerial effects
- Compact design and lightweight (<28 kg)
- 183 mm front lens creating strong stage presence
- Quick setup & service thanks to NFC readiness

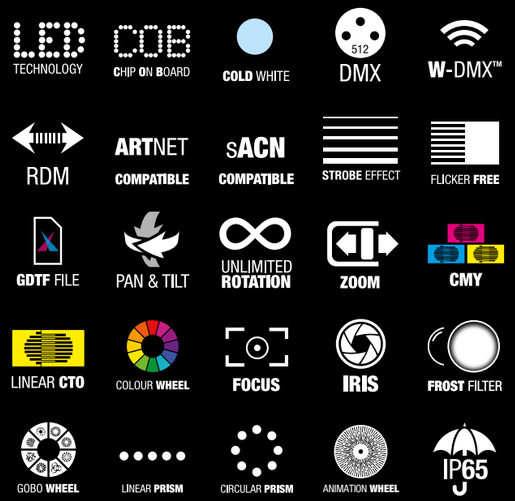

Note: The values given are preliminary.

CLOH6IP

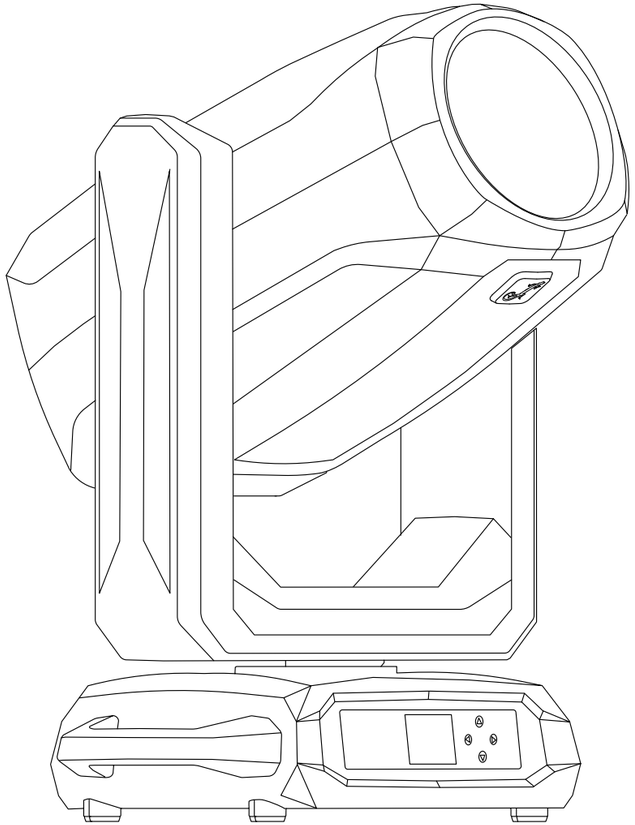

OPUS® SP6 IP

IP65 SPOT PROFILE MOVING HEAD

- IP65 Spot Profile Moving Head with 600 W single white LED
- 23,000 lm output – extremely bright for large stages
- Fully closable framing ±85° for precise beam shaping
- CRI >85 for accurate, natural colour rendering
- Endless pan rotation & wide zoom range from 3.5° - 53°
- Compact design and lightweight (<28 kg)
- 183 mm front lens creating strong stage presence
- Quick setup & service thanks to NFC readiness

LED TECHNOLOGY · RGB ALC · 512 DMX · W-DMX™ · RDM

ARTNET COMPATIBLE · sACN COMPATIBLE · STROBE EFFECT · FLICKER FREE · GDTF FILE

PAN & TILT · UNLIMITED ROTATION · ZOOM · FOCUS · IRIS

FROST FILTER · GOBO WHEEL · LINEAR PRISM · CIRCULAR PRISM · 4-SHUTTER FRAMING BLADES

ANIMATION WHEEL · IP65

Note: The values given are preliminary.

CLOSP6IP





OTOS® LC12

IP65 MOVING BAR

- 12 individually tiltable and zoomable 50 W moving heads with RGBL colour mixing system
- Tilt range per head: 206° (+/- 103°) for dynamic motion effects
- Zoom range per head (single lens zoom) for flexible lighting design
- Integrated FX strip (such as OTOS® L16 and OTOS® Wash FX rings)
- Creates linear curve effects for kinetic beam looks and eye-catching front light
- 1,800–10,000 K CCT range, CRI > 85
- IP65 protection for outdoor and touring applications
- Quick-lock mechanism and strategically placed handles for efficient handling
- Weight: approx. 31 kg

LED TECHNOLOGY · RGB L · 512 DMX · W-DMX™ · RDM

ARTNET COMPATIBLE · sACN COMPATIBLE · SINGLE PIXEL CONTROL · STROBE EFFECT · FLICKER FREE

GDTF FILE · ZOOM · IP65

Note: The values given are preliminary.

CLOTOSLC12



OTOS® L16

IP65 MOVING BAR

- 16 × 50 W RGBL LEDs with 9,300 lm output
- Motorised tilt range: 208° (+/- 104°) for dynamic movements
- 2 independent zoom segments, each with 8 lenses (left and right), 5°–38° zoom range
- Integrated FX strip (such as OTOS® LC12 and OTOS® Wash FX rings)
- Linear bar design, ideal for precise beam looks and symmetrical effects
- Seamless clustering for continuous light surfaces
- IP65 protection for outdoor and touring applications
- Quick-lock mechanism and strategically placed handles for efficient handling
- Weight: approx. 25,8 kg
- 4 different filters optionally available

LED TECHNOLOGY · RGB L · 512 DMX · W-DMX™ · RDM · ARTNET COMPATIBLE · sACN COMPATIBLE · SINGLE PIXEL CONTROL · STROBE EFFECT · FLICKER FREE · GDTF FILE · ZOOM · IP65

Note: The values given are preliminary.

CLOTOSL16



ORON® H2

IP65 HYBRID PHOSPHOR-LASER MOVING HEAD

- World's first IP65 hybrid phosphor-laser moving head
- 260 W phosphor-laser-engine
- Replaces discharge lamps in the 480 watt class
- High light output: 330,000 lux at 20 m
- Zoom range: 0.6°-32°
- CMY colour mixing + linear CTO correction
- 19 fixed + 12 rotating gobos + open
- 2 effect wheels with 6 prisms, beam ovaliser and frost filter
- Flexible control via DMX/RDM, Art-Net, sACN, W-DMX, and CRMX
- Including touring case insert to protect against impacts

MULTIPLE ANGLES · COLD WHITE · 512 DMX · RDM · STAND ALONE MODE · MASTER/SLAVE · sACN COMPATIBLE · ARTNET COMPATIBLE · STROBE EFFECT · FLICKER FREE · PAN & TILT · ZOOM · CMY · LINEAR CTO · COLOUR WHEEL · FOCUS · W-DMX™ · GOBO WHEEL · LINEAR PRISM · CIRCULAR PRISM · ANIMATION WHEEL · IP65 · Intertek

CLORONH2



AZOR® SP2 IP

COMPACT IP65 SPOT PROFILE MOVING HEAD

- IP65 Spot Profile Moving Head with 300 W LED and 11,100 lm luminous flux
- Zoom range: 3°–51°
- CMY colour mixing and additional colour wheel with eight dichroic filters
- CMY colour mixing + and additional colour wheel with eight dichroic filters
- Rotating gobo wheel with seven indexable/ rotatable, replaceable glass gobos + open
- Overlapping prisms (circular)
- Linear CTO for colour temperature adjustments
- Selectable PWM frequencies up to 25 kHz for flicker-free operation
- Quiet operation in three noise modes



CLAZORSP2IP



OTOS® B5

IP65 BEAM MOVING HEAD

- IP65 rated beam moving head with 480 W discharge lamp
- 11,500 lux @100 m, 511,000 lux @15 m
- High quality optics with 205 mm front lens
- Continuous CMY colour mixing + 14 dichroic filters for saturated colours and whites
- Particularly narrow beam angle of 1°
- Static gobo wheel with 19 gobos + open
- 3 rotatable and indexable prisms on two levels (overlapping)
- Easy handling and low weight (33 kg)
- Flexible control options via integrated W-DMX™ transceiver, DMX and RDM

DISCHARGE **LAMP** · **COLD** WHITE · 512 DMX · **W**-DMX™ · RDM

STAND ALONE MODE · MASTER/SLAVE · **STROBE** EFFECT · Intertek · PAN & TILT

CMY · COLOUR **WHEEL** · **FOCUS** · GOBO **WHEEL** · CIRCULAR **PRISM**

IP65

CLOTOSB5



OTOS® H5

IP65 BEAM SPOT WASH HYBRID MOVING HEAD

- IP65 rated beam spot wash hybrid moving head with 19,000 lm luminous flux
- Continuously adjustable CMY colour mixing in addition to 15 dichroic filters for saturated colours and white tones
- High-quality optics with 135 mm front lens and especially wide zoom range of 2° to 42°
- Rotating gobo wheel with 8 indexable and rotatable replaceable glass gobos + open
- Static gobo wheel with 19 gobos + open
- 2 rotatable and indexable prisms for varied mid-air effects
- High CRI filter (>80) for enhanced colour reproduction and adaptation to TV and film cameras
- Variable frost filter for use as a wash light
- Flexible control options via a built-in W-DMX™ transceiver, DMX and RDM



CLOTOSH5





OTOS® W3

IP65 WASH MOVING HEAD

- 7 x 50W RGBL LED with a total output of 4,000 lm luminous flux
- Single Pixel Control
- Controllable LED effect ring
- Zoom lens and zoom range 4° - 60°
- Controllable zoom level
- Dual input mode as option for pixel mapping
- Flexible control options via integrated W-DMX™ & CRMX transceiver, DMX and RDM
- Supplied in matching flight case insert

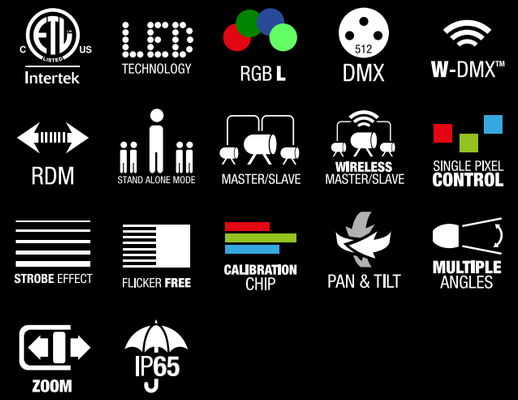

CLOTOSW3



OTOS® W6

IP65 WASH MOVING HEAD

- 16 x 50W RGBL LED with a total output of 8,200 lm luminous flux
- Single Pixel Control
- Controllable LED effect ring
- Zoom lens and zoom range 4° - 60°
- Dual zoom enables two individually controllable zoom levels
- Dual input mode as option for pixel mapping
- Flexible control options via integrated W-DMX™ & CRMX transceiver, DMX and RDM
- Supplied in matching flight case insert

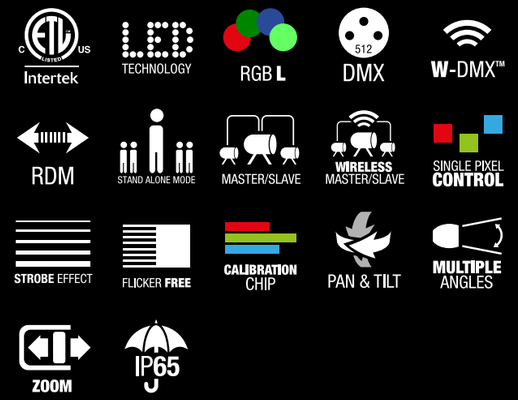

CLOTOSW6



OTOS® W12

IP65 WASH MOVING HEAD

- 32 x 50W RGBL-LED with a total output of 19,500 lm luminous flux
- Single Pixel Control
- Controllable LED effect ring
- Zoom lens and zoom range 4° - 60°
- Multi-zoom enables three individually controllable zoom levels
- Dual input mode as option for pixel mapping
- Flexible control options via integrated W-DMX™ & CRMX transceiver, DMX and RDM
- Supplied in matching flight case insert

Intertek · LED TECHNOLOGY · RGB L · 512 DMX · W-DMX™ · RDM · STAND ALONE MODE · MASTER/SLAVE · WIRELESS MASTER/SLAVE · SINGLE PIXEL CONTROL · STROBE EFFECT · FLICKER FREE · CALIBRATION CHIP · PAN & TILT · MULTIPLE ANGLES · ZOOM · IP65

CLOTOSW12

INDOOR MOVING LIGHTS

OUTDOOR STATIC LIGHTS	66
INDOOR STATIC LIGHTS	116
SHOW LASERS & EFFECTS	178
ARCHITECTURAL OUTDOOR LIGHTS	202
ARCHITECTURAL INDOOR LIGHTS	212
LIGHTING TOOLS	230
ICON LEGEND / REGISTER	256



DonnyMontell © Joana Suslavičiūtė, Lithuania 2024

HIGHLIGHT

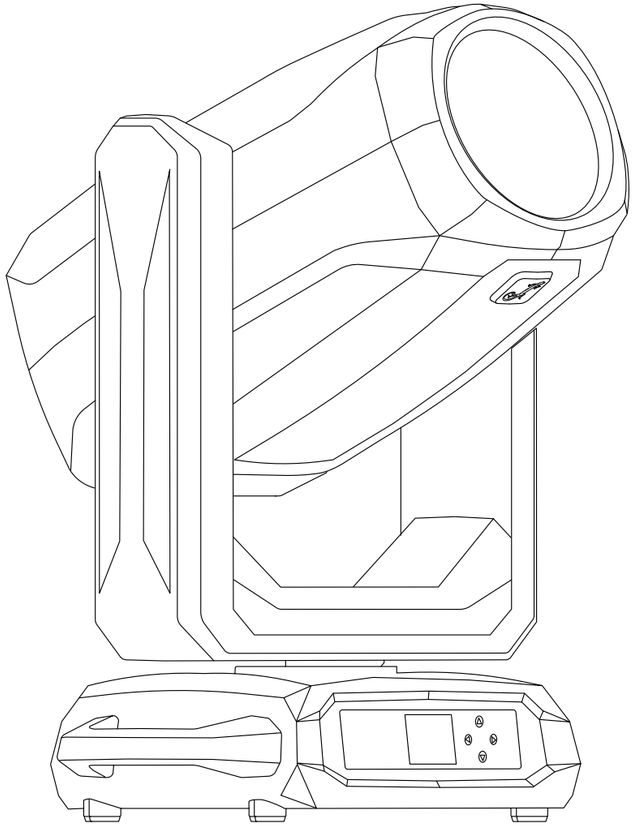

OPUS® SP6 FC

PROFILE SPOT MOVING HEAD

- Full-Colour Spot Profile Moving Head with 600 W RGBALC LED
- High CRI & TLCI (both >94) for accurate, natural colour rendering in theatre & broadcast
- CCT range: 1,800 K – 10,000 K
- Fully closable framing ±85° for precise beam shaping
- Wide zoom range from 3.5° - 53°
- Exchangeable lenses (PC & Fresnel)
- Super lightweight (<24 kg) and easy to handle thanks to compact design
- Ultra-quiet fan modes for noise-sensitive environments
- Quick setup & service thanks to NFC readiness

LED TECHNOLOGY · 512 DMX · W-DMX™ · RDM · ARTNET COMPATIBLE · sACN COMPATIBLE · STROBE EFFECT · FLICKER FREE · GDTF FILE · PAN & TILT · ZOOM · FOCUS · IRIS · FROST FILTER · GOBO WHEEL · LINEAR PRISM · CIRCULAR PRISM · ANIMATION WHEEL

Note: The values given are preliminary.

CLOSP6FC



OPUS® X4 PROFILE

1400W LED SPOT PROFILE MOVING HEAD

- High-performance moving head
- Robust LED engine with 1400W LED white light engine
- High-intensity illumination with 50,000 lumens output
- Wide zoom range: 5°-55°
- Advanced colour mixing with CMY colour mixing + linear CTO correction
- Creative colour transitions with 2 x colour wheels
- Visual effects with 2 x gobo wheels + animation wheel
- Precise framing with 4x framing blades with +/- 60° rotation
- Iris + 2 x frost filters
- Flexible control options with DMX/RDM, Art-Net, sACN, W-DMX, and CRMX
- Including touring case insert to protect against impacts

FROST FILTER · LED TECHNOLOGY · COLD WHITE · 512 DMX · RDM

STAND ALONE MODE · MASTER/SLAVE · sACN COMPATIBLE · ARTNET COMPATIBLE · STROBE EFFECT

FLICKER FREE · PAN & TILT · ZOOM · CMY · LINEAR CTO

COLOUR WHEEL · FOCUS · IRIS · GOBO WHEEL · LINEAR PRISM

CIRCULAR PRISM · 4-SHUTTER FRAMING BLADES · ANIMATION WHEEL · Intertek · W-DMX™

MULTIPLE ANGLES

CLOX4P



OPUS® X PROFILE

HIGH-POWER PROFILE MOVING HEAD

- High-power profile moving head with 33,000 lm / 72,000 lux (@ 5 m)
- CMY colour blending and additional colour wheel with 6 dichroic filters
- High-quality optics with 170-mm front lens and extremely wide zoom range of 6° to 48°
- Angle and position of each diaphragm slider adjustable to complete closure
- Rotatable animation wheel, rotating gobo wheel and static gobo wheel
- Rotatable and indexable circular fivefold prism and linear sixfold prism
- Variable frost filter for wash light effects and continuously adjustable iris
- Smooth dimming with 16-bit resolution and 4 selectable curves
- Battery-powered touchscreen display with rotary encoder
- Flexible control via built-in W-DMX™ transceiver, DMX, RDM, Art-Net or sACN

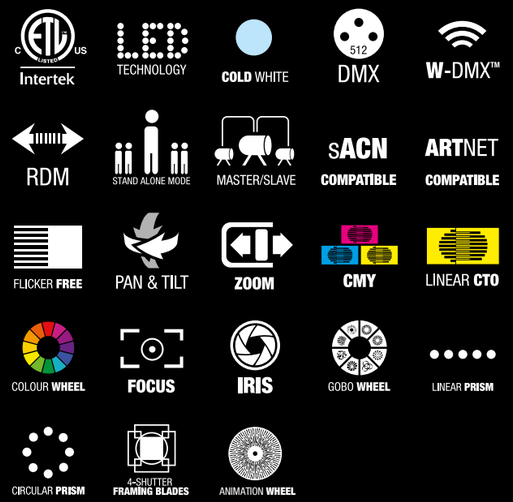

CLOXP



OPUS® X WASH

HIGH-POWER WASH MOVING HEAD

- High-power wash moving head with 32,000 lm
- CMY color blending and 2 additional color wheels, each with 6 dichroic filters
- Linear CTO correction to 2,600 K
- High-quality optics with 170 mm PC lens and extremely wide zoom range from 5°-46°
- Even and flat projection field without hot spots at any zoom angle
- 4-blade framing system with +/- 45° rotation, individually controllable up to full blackout
- Variable frost plus stepless iris
- Flicker-free operation thanks to selectable PWM frequencies up to 25 kHz
- Battery-powered touchscreen display with encoder wheel for offline configuration
- Flexible control via built-in W-DMX™ Transceiver, DMX, RDM, Art-Net or sACN

WIRELESS MASTER/SLAVE · LED TECHNOLOGY · COLD WHITE · 512 DMX · W-DMX™ · RDM · STAND ALONE MODE · MASTER/SLAVE · sACN COMPATIBLE · ARTNET COMPATIBLE · FLICKER FREE · PAN & TILT · ZOOM · CMY · LINEAR CTO · COLOUR WHEEL · FOCUS · IRIS · 4-SHUTTER FRAMING BLADES · Intertek · STROBE EFFECT · KlingNet COMPATIBLE

CLOXW



OPUS® S5

SPOT MOVING HEAD

- Compact super bright Spot Moving Head with 17.500 lm output and huge illuminance of 39,000 lux @ 5 m
- Advanced CMY colour mixing system plus colour wheel with 7 dichroic filters
- Highly efficient optics with extra wide 6° - 46° zoom range
- Even and flat projection field without hot spots at any zoom angle
- Rotating animation wheel
- Rotating gobo wheel with 7 interchangeable indexable glass gobos + open
- Static gobo wheel with 8 interchangeable glass gobos + open
- Rotatable and indexable 3-facet circular prism plus 6-facet linear prism
- Variable frost for wash-like effects plus stepless iris
- Ultra smooth 16-bit dimming with 4 selectable curves

ANIMATION **WHEEL** · LED TECHNOLOGY · **COLD** WHITE · 512 DMX · RDM

STAND ALONE MODE · MASTER/SLAVE · **sACN COMPATIBLE** · **ARTNET COMPATIBLE** · FLICKER **FREE**

PAN & TILT · **ZOOM** · **CMY** · LINEAR **CTO** · COLOUR **WHEEL**

FOCUS · GOBO **WHEEL** · LINEAR **PRISM** · CIRCULAR **PRISM**

CLOS5



OPUS® SP5+

PROFILE SPOT MOVING HEAD

- Efficient Profile Moving Head with an improved LED engine offering 22,000 lumen output
- CMY colour mixing system with linear CTO correction from 6,500 - 2,600 K for authentic tungsten emulation
- High-quality optics with a 130 mm front lens and an extra wide 6° - 42° zoom range
- Even and flat projection field without hot spots at any zoom angle
- 4-blade framing system with +/- 45° rotation, with angle and position of each shutter blade individually controllable up to full blackout
- Framing shutter module replaceable with animation wheel module (available as an accessory)
- Rotating gobo wheel with 7 replaceable indexable glass gobos + open
- Static gobo wheel with 8 replaceable glass gobos + open
- Rotatable and indexable 3-facet circular prism plus 6-facet linear prism

ANIMATION WHEEL · LED TECHNOLOGY · ETL LISTED Intertek · 512 DMX · W-DMX™

RDM · sACN COMPATIBLE · ARTNET COMPATIBLE · FLICKER FREE · ZOOM

CMY · LINEAR CTO · COLOUR WHEEL · FOCUS · IRIS

GOBO WHEEL · LINEAR PRISM · CIRCULAR PRISM · 4-SHUTTER FRAMING BLADES

CLOSP5PLUS



OPUS® SP5 FC

PROFILE SPOT MOVING HEAD

- Profile Spot Moving Head with 300 W Full Colour RGBAL-LED
- Display the complete colour spectrum with CRI >90 and TLCI 93
- High-quality optic with especially long zoom range of 6° to 44°
- Even projection without colour shadows
- Fourfold diaphragm slider system with +/- 45° rotation
- Angle and position of each diaphragm slider ad justable up to complete closure
- Rotatable animation wheel
- Rotating gobo wheel with 6 indexable and rotatable replaceable glass gobos plus open
- Static gobo wheel with 7 replaceable glass gobos plus open
- Rotatable and indexable circular threefold prism and linear sixfold prism
- Variable frost filter for washlight effects and continuously variable iris diaphragm

Intertek · LED TECHNOLOGY · RGBAL · W-DMX™ · sACN COMPATIBLE
ARTNET COMPATIBLE · FLICKER FREE · ZOOM · CMY · LINEAR CTO
COLOUR WHEEL · FOCUS · IRIS · GOBO WHEEL · LINEAR PRISM
CIRCULAR PRISM · 4-SHUTTER FRAMING BLADES · ANIMATION WHEEL

CLOSP5FC





OPUS® W5

WASH MOVING HEAD

- Wash Moving Head with 15,400 lm
- CMY color mixing and 2 additional color wheels, each with 7 dichroic filters
- Linear CTO correction from 6,500 - 2,600 K
- High-quality optics with 170 mm PC lens and extremely wide zoom range from 6° - 48°
- Even and flat projection field without hot spots at any zoom angle
- 4-blade framing system with +/- 45° rotation, individually controllable up to full blackout
- Variable frost plus stepless iris
- Flicker-free operation thanks to selectable PWM frequencies up to 25 kHz
- Battery powered touchscreen display plus 6 touch buttons for offline configuration
- Flexible control via built-in W-DMX™ Transceiver, DMX, RDM, Art-Net or sACN

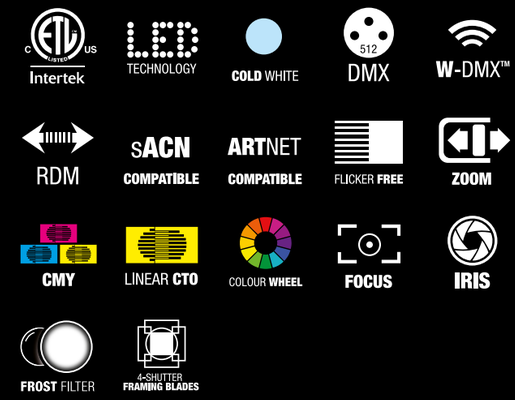

CLOW5



OPUS® H5

BEAM SPOT WASH HYBRID MOVING HEAD

- Extremely flexible beam spot wash hybrid moving head with 18,000 lm / 407,000 lux at 10 m
- CMY colour blending and additional colour wheel with 13 dichroic filters
- High-quality optics with 130-mm front lens and especially wide zoom range of 2° to 42°
- A total of five prisms at two levels for varied mid-air effects
- High CRI filter (>85) for enhanced colour reproduction and adaptation to TV and film cameras
- Nine interchangeable, rotating gobos and 13 static gobos
- Smooth dimming with 16-bit resolution and 4 selectable curves
- Battery-operated touchscreen display with push encoder for quick and simple set-up
- Flexible control via built-in W-DMX™ transreceiver, DMX, RDM, Art-Net or sACN
- Osram lamp Sirius HRI 470 W, two Omega brackets and power cable included

DISCHARGE **LAMP** · **W-DMX™** · 512 **DMX** · **RDM** · STAND ALONE MODE

MASTER/SLAVE · **ARTNET COMPATIBLE** · **sACN COMPATIBLE** · FLICKER **FREE** · PAN & TILT

ZOOM · **CMY** · LINEAR **CTO** · COLOUR **WHEEL** · **FOCUS**

GOBO **WHEEL** · LINEAR **PRISM** · CIRCULAR **PRISM** · ANIMATION **WHEEL** · Intertek

CLOH5



EVOS® W7

LED WASH-MOVING HEAD

- Wash-Beam Moving Head with 12,500 lm luminous flux
- Light intensity of 96,000 lx @ 1 m
- 19 full-colour 40 W RGBW LEDs
- Precise colour reproduction with CRI > Ra 90
- Individual control of all LEDs (Single Pixel Control)
- Zoom range of 4.5° to 34° (beam) / 7° to 55° (field)
- Adjustable refresh rate of between 800 Hz and 25 kHz
- Control via DMX, RDM Art-Net3, sACN or KlingNet
- Intuitive rotary encoder for easy configuration
- Includes Beam Shaper for asymmetrical beams

Intertek · LED TECHNOLOGY · 512 DMX · W-DMX™ · RDM

STAND ALONE MODE · MASTER/SLAVE · WIRELESS MASTER/SLAVE · ARTNET COMPATIBLE · sACN COMPATIBLE

KlingNet COMPATIBLE · SINGLE PIXEL CONTROL · STROBE EFFECT · FLICKER FREE · PAN & TILT

ZOOM

CLEW7



EVOS® W3

COMPACT LED WASH-MOVING HEAD

- LED wash light with movable head and 4,200 lm luminous flux
- 53,000 lx illuminance at a distance of 3 m
- Full-colour LED with additional warm white chip
- Ideally suited for illumination thanks to high CRI> 96 at 3,200 K
- All LEDs can be controlled individually (pixel mapping capability) for matrix effects
- Large zoom range from 4° to 55°
- Adjustable refresh rate for flicker-free camera images
- Can be controlled via DMX, RDM, Art-Net3, sACN, KlingNet or W-DMX
- Preset LEE colour filters for problem-free use with conventional spotlights
- Battery-powered display with intuitive encoder operation for offline configuration

Intertek
LED TECHNOLOGY
512 DMX
W-DMX™
RDM
STAND ALONE MODE
MASTER/SLAVE
WIRELESS MASTER/SLAVE
ARTNET COMPATIBLE
sACN COMPATIBLE
KlingNet COMPATIBLE
SINGLE PIXEL CONTROL
FLICKER FREE
PAN & TILT
ZOOM

CLEW3





AZOR® SP2

COMPACT SPOT PROFILE MOVING HEAD

- 300 W LED with 13,000 lm luminous flux
- Motorized framing blades on 4 layers (+/- 60° roatable)
- Zoom range: 3° - 50°
- CMY colour mixing and additional colour wheel with 8 dichroic colour filters
- Rotating gobo wheel with 7 indexable/rotatable, exchangeable glass gobos + open
- Overlapping prisms (circular)
- Linear CTO for colour temperature modulation in lighting setups
- Selectable PWM frequencies up to 25 kHz for flicker-free operation
- Silent operation in 3 noise-modes

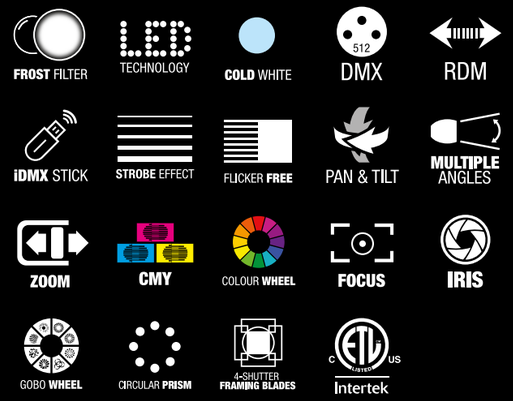

CLAZORSP2



AZOR® S2

COMPACT SPOT MOVING HEAD

- Compact spot moving head
- 300 W LED illuminant with 13,000 lm luminous flux
- Zoom range: 5° - 50°
- CMY colour mixing
- Additional colour wheel with 8 dichroic colour filters
- Rotating gobo wheel with 8 indexable/rotatable, exchangeable glass gobos + open
- Static gobo wheel with 11 gobos + open
- Selectable PWM frequencies up to 25 kHz for flicker-free operation
- Neutrik True1-compatible inputs/outputs
- OLED display with 4 buttons

CIRCULAR **PRISM** · LED TECHNOLOGY · **COLD** WHITE · 512 DMX · **W**-DMX™ · RDM · **STROBE** EFFECT · FLICKER **FREE** · PAN & TILT · **MULTIPLE** ANGLES · **ZOOM** · **CMY** · COLOUR **WHEEL** · **FOCUS** · **IRIS** · GOBO **WHEEL**

CLAZORS2



AZOR® W2

COMPACT WASH MOVING HEAD

- 7 x 40 W RGBL LED with 3,600 lm luminous flux
- Zoom range: 4° - 50°
- Single pixel control of all 7 LEDs
- Eclipse Burst Effect* for strobe and pixel effects
- Selectable PWM frequencies
- iDMX stick input for wireless DMX connection
- OLED display with 4 buttons

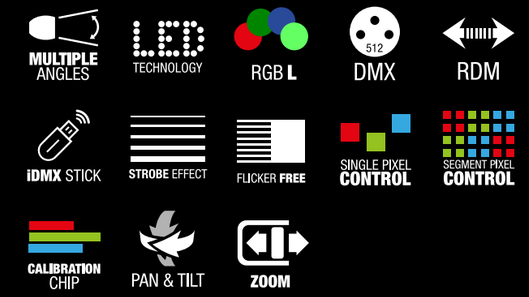

CLAZORW2



AZOR® B1

COMPACT BEAM MOVING HEAD

- Beam Moving Head with 180,000 lx light intensity @ 3 m
- Optical glass lens with extremely narrow 2° beam angle
- 16-bit three-phase motors
- 540° panning and 270° tilting with automated position correction
- Motorised focusing
- 14 colours plus open and split colours
- 17 static gobos plus open
- Rotatable and indexable circular eightfold prism
- 4 programmable macros for standalone and master-slave operation
- 3-pin & 5-pin DMX sockets and Power Twist power in and power out sockets
- Two Omega brackets and power cable included

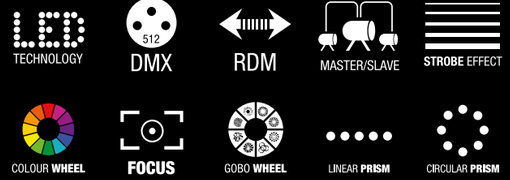

CLAB1





AURO® SPOT Z300

LED SPOT MOVING HEADS

- Compact spot moving head with 7,500 lm luminous flux & LED Lifetime >20,000 hours
- 10° to 25° zoom range
- Extremely even light dispersion free of hotspotss
- Automatic position correction
- Motorised focus
- 2 gobo wheels, 6 rotating gobos (indexable and exchangeable) and 6 fixed gobos + open
- Continuously adjustable colour wheel with 8 intense colours + open
- Indexable and rotating 5-facet linear and 6-facet circular prisms
- 4 programmable macros for standalone and master-slave operation
- Soft frost filter for washlight effects
- Flicker-free for use in TV, film and photo studios
- Battery-powered 6-button display for offline configuration

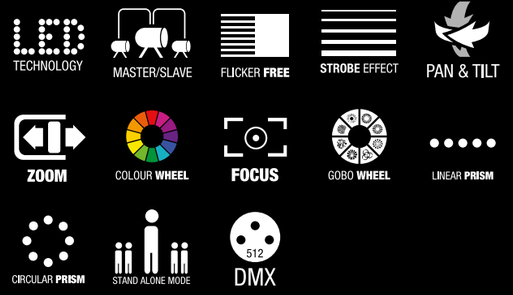

CLASZ300





MOVO® BEAM 200

ENDLESS ROTATION BEAM MOVING HEAD WITH LED RING

- Ultra-bright 60 W OSRAM RGBW LED with 1.200 lm
- Individually controllable 24-segment LED ring
- Two high-speed, high torque motors for ultra-fast endless pan and tilt
- Extremely narrow 2° beam angle
- Dramatic, automated operating modes
- 4 selectable dimming curves
- 7 DMX modes, standalone or master/slave operation
- Backlight LCD display and encoder wheel for quick and simple set-up
- Omega bracket for versatile mounting included



CLMB200

OUTDOOR STATIC LIGHTS

INDOOR STATIC LIGHTS	116
SHOW LASERS & EFFECTS	178
ARCHITECTURAL OUTDOOR LIGHTS	202
ARCHITECTURAL INDOOR LIGHTS	212
LIGHTING TOOLS	230
ICON LEGEND / REGISTER	256



Tomorrowland Festival, Belgium 2025





ZENIT® W600 G2

IP65 LED WASH LIGHT

- 40 x 50 W RGBALC LEDs with 32,000 lm luminous flux at 660 W power consumption
- High colour rendering with CRI 98 and TLCI 95 for stage, TV and broadcast
- Extremely precise, calibrated XColour™ colour mixing and vertical segment control for creative applications
- Only 12.9 kg in weight thanks to compact, IP65-rated die-cast magnesium housing
- Swiss-engineered cooling system with selectable fan modes
- Fast Setup (via NFC) and maintenance via the new all-in-one Cameo Connect App: NFC setup, wireless configuration, firmware updates and direct service access
- Quick rigging thanks to ergonomic handles and optimally positioned safety eyelets
- Integrated Legacy Mode ensuring consistent colours, output and dimming behaviour with the previous model
- Compatible with ZENIT® W600 G1 filters, barndoors and mounting materials
- Optional Cameo SnapMag® FX Filter: DMX-controllable electronic frost for quick transitions from 18° to 54° beam angle

LED TECHNOLOGY · RGB ALC · 512 DMX · W-DMX™ · RDM · SEGMENT PIXEL CONTROL · STROBE EFFECT · FLICKER FREE · CALIBRATION CHIP · GDTF FILE · SNAPMAG® TECHNOLOGY · IP65

Note: The values given are preliminary.

CLZW600G2

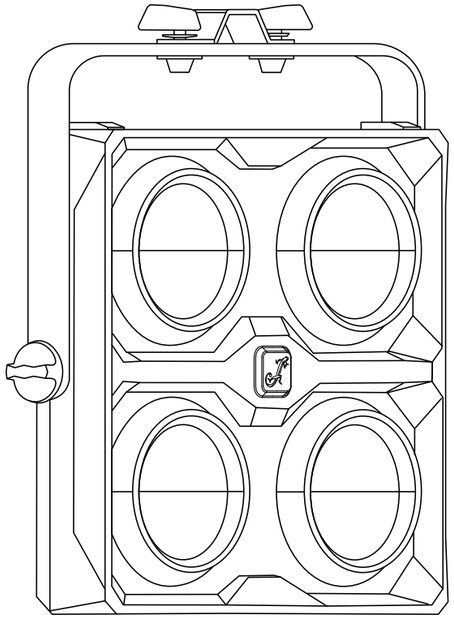

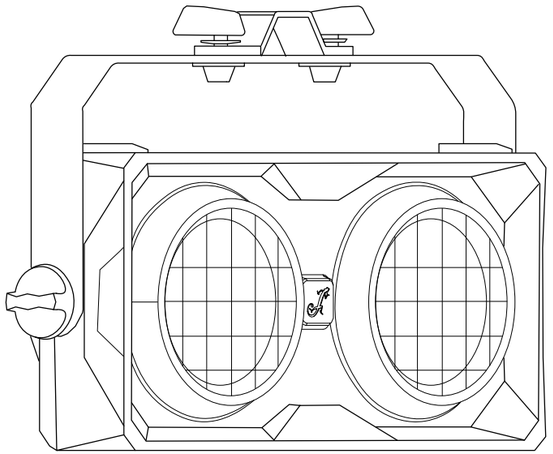

SUNO SERIES

IP65 2/4 LIGHT BLINDER

- IP65 Blinder with 600 W and 1,200 W RGBAWW-LED
- Available in 2-light and 4-light version
- Output: >55,000 lm thanks to integrated boost mode
- Authentic PAR 36 DWE look with filament-style center LEDs
- Precise 22-bit dimming with selectable curves and high PWM frequencies
- Die-cast aluminum housing with TRUE1 TOP power connectivity
- CCT range: 1,800 K – 10,000 K
- Built for demanding touring and outdoor use

LED TECHNOLOGY · NATURAL WHITE · WARM WHITE · 512 DMX · W-DMX™ · RDM · STROBE EFFECT · FLICKER FREE · DIM TO WARM · IP65

Note: The values given are preliminary.



ZIYA® 200 / 400

IP65 LED ZOOM PAR

- Zoom PAR with 4 × 60 W RGBL LEDs (ZIYA® 200) / 7 × 60 W RGBL LEDs (ZIYA® 400) for rich colours and uniform white light
- Wide zoom range of 5° - 32° (field 7° - 50°) for dynamic looks
- CRI: 97 (3,200 K) / 96 (5,600 K)
- Light output: 3,500 lm (ZIYA® 200) / 6,200 lm (ZIYA® 400)
- Motorised silent zoom with vibration-free operation
- Variable colour temperature (CCT) from 2,400 K to 10,000 K and 15 colour presets
- Various fan modes can be selected
- Robust IP65 housing for outdoor and touring applications
- Patented SPIN16® technology for quick and flexible installation thanks to the 16 mm TV spigot integrated into the bracket
- Optional accessories: barndoor & flight case



Note: The values given are preliminary.

CLZIYA200 / CLZIYA400









ZIYA® 200 COB / 400 COB

IP65 COB LED ZOOM PAR

- Zoom PAR with RGBALC COB LED for rich colours and uniform white light
- Wide zoom range of 13° - 35° (Field 27° - 52°) for dynamic looks
- CRI: 97 (3,200 K) / 96 (5,600 K)
- Light output: 6,000 lm (ZIYA® 200 COB) / 9,800 lm (ZIYA® 400 COB)
- Fresnel lens for homogeneous light distribution without hotspots
- Variable colour temperature (CCT) from 2,400 K to 10,000 K and 15 colour presets
- Various fan modes can be selected
- Robust IP65 housing for outdoor and touring applications
- Patented SPIN16® technology for quick and flexible installation thanks to the 16 mm TV spigot integrated into the bracket
- Optional accessories: barndoor & flight case

LED TECHNOLOGY · COB CHIP ON BOARD · W-DMX™ · 512 DMX · RDM

STAND ALONE MODE · MASTER/SLAVE · STROBE EFFECT · FLICKER FREE · CALIBRATION CHIP

GDTF FILE · MULTIPLE ANGLES · ZOOM · IP65

Note: The values given are preliminary.

CLZIYA200COB / CLZIYA400COB





ROOT® PAR IP

OUTDOOR LED SPOTLIGHT

- Robust LED light with 7 × 8 W RGBW LEDs for versatile outdoor applications
- Flexible positioning thanks to swivelling foot for easy adjustment of the beam angle, without additional brackets
- 3000 lumens and a beam angle of 30°
- True1-compatible power sockets and three-pin XLR connectors for easy integration into existing DMX set-ups
- Patented EZchase® DMX delay function for creative chaser effects and colour changes without much programming effort
- Compact, lightweight design weighing only 4 kg for easy handling and transport
- IP65 protection class for safe use at outdoor events, even in difficult weather conditions

IP65 · LED TECHNOLOGY · RGBW · 512 DMX · STAND ALONE MODE · MASTER/SLAVE · EZChase®

CLROOTPARIP





ZENIT® W300 / W600

OUTDOOR LED WASH LIGHT

- 21 / 40 x 15 W RGBW LEDs with 10,000 / 21,000 lm total output for uniform and powerful colour mixing
- 18° / 21° beam and 35° field angles without diffuser
- Optional SnapMag® filter frames for 25°, 45° or 100° and elliptical 60° x 10° beam angle selection and installation without tools or dismantling
- Built-in 2.4 GHz W-DMX™ transceiver
- Wireless master and slave operation
- W-DMX™, RDM, DMX or IR control plus standalone modes with automated programs
- IP65 rating for outdoor use
- Low-noise temperature controlled fans for optimized operation
- 16-bit technology for high-resolution colours and dimming

Intertek · LED TECHNOLOGY · RGBW · 512 DMX · W-DMX™ · RDM · STAND ALONE MODE · MASTER/SLAVE · WIRELESS MASTER/SLAVE · iDMX® APP CONTROL · MULTIPLE ANGLES · SNAPMAG® TECHNOLOGY · IP65

CLZW300 · CLZW600





ZENIT® W600 SMD

OUTDOOR SMD LED WASH LIGHT AND STROBE - RGBW VERSION

- Featuring a total of 504 SMD 4-in-1 LEDs with up to 41,000 lm luminous flux for extreme brightness
- Precise and high-resolution colours, as well as mixed colours in the RGBW spectrum
- 12 individually controllable segments
- Boost in blinder mode for temporarily increased output
- IP65 rated for outdoor use
- High-resolution dimmer response thanks to 16-bit technology
- 2,700 - 6,500 K colour temperature and CRI 85 for uncompromised colour reproduction
- Integrated 2.4 GHz W-DMX™ transceiver
- Control via W-DMX™, DMX and RDM (via DMX and W-DMX™)
- Temperature-controlled fans for optimised low-noise operation

LED TECHNOLOGY · RGBW · Intertek · DMX · W-DMX™ · RDM · STAND ALONE MODE · MASTER/SLAVE · FLICKER FREE · CALIBRATION CHIP · SNAPMAG® TECHNOLOGY · IP65

CLZW600SMD





ZENIT® W300 SMD

COMPACT IP65 SMD LED WASH LIGHT & STROBE

- Featuring a total of 270 SMD 4-in-1 LEDs with up to 17,000 lm luminous flux for extreme brightness
- Precise and high-resolution colours, as well as mixed colours in the RGBW spectrum
- 6 individually controllable segments
- Boost in blinder mode for temporarily increased output
- IP65 rated for outdoor use
- High-resolution dimmer response thanks to 16-bit technology
- 2,700 - 6,500 K colour temperature and CRI 85 for uncompromised colour reproduction
- Integrated 2.4 GHz W-DMX™ transceiver
- Control via W-DMX™, DMX and RDM (via DMX and W-DMX™)
- Temperature-controlled fans for optimised low-noise operation



CLZW300SMD





ZENIT® B200

BATTERY POWERED OUTDOOR WASH LIGHT

- 21 x 15 W RGBW LEDs with 6,600 lm total output for uniform colour mixes
- Long-life super capacity lithium-ion battery for reliable operation
- Battery Management System prevents overcharging and exhaustive discharge
- 21° beam and 40° field angles without diffuser
- Optional SnapMag® filter frames for 25°, 45°, 100° or elliptical 60° x 10° beam angle selection and installation without tools or dismantling
- Built-in 2.4 GHz W-DMX™ transceiver
- Wireless master and slave operation
- W-DMX™, RDM, DMX or IR control plus standalone modes with automated programs
- Convection cooling for noiseless operation
- 16-bit technology for high-resolution colours and dimming

Intertek · LED TECHNOLOGY · RGBW · 512 DMX · W-DMX™ · STAND ALONE MODE · MASTER/SLAVE · WIRELESS MASTER/SLAVE · BATTERY POWERED · MULTIPLE ANGLES · SNAPMAG® TECHNOLOGY · IP65

CLZB200





ZENIT® Z180 G2

PAR SPOTLIGHT WITH ZOOM AND IP65 PROTECTION CLASS

- Powerful, professional IP65 PAR spotlight with 10–40° zoom
- 180 W RGBW COB LED
- Fast, flexible mounting options via patented SPIN16® technology, featuring a mounting bracket with an integrated 16-mm TV spigot
- High-resolution colour blending and dimmer response with 16-bit technology
- Colour temperature correction
- Variable white balance
- 4 high-resolution dimmer curves with variable response
- Easy configuration via OLED display with 4 illuminated touch-sensitive controls
- Access lock against unauthorised changes to the menu settings
- Fully RDM enabled
- Flicker-free: perfect for TV and film applications
- 5-pin DMX sockets and IP65-rated powerCON TRUE1-compatible power sockets

IP65 · LED TECHNOLOGY · COB CHIP ON BOARD · RGBW · 512 DMX · RDM · STAND ALONE MODE · MASTER/SLAVE · STROBE EFFECT · ZOOM

CLZZ180G2



ZENIT® P130 LSD

OUTDOOR PAR CAN IP65 WITH INNOVATIVE LIGHT SHAPING DIFFUSORS

- Professional IP65 outdoor PAR can with 4 x 32 W RGBW Osram OSTAR LEDs and 8° beam angle
- Includes 2 innovative light shaping diffusers for beam angles of 25° or 45° while maintaining transmission efficiency
- RDM capability
- 16-bit technology for high-resolution Colours and dimming
- Flicker free, ideal for motion picture and TV applications
- Colour temperature and individual LED Colour correction
- 4 ultra smooth dimming curves and adjustable halogen lamp-like dimming response
- 7 modes of DMX control plus master, slave and standalone capabilityr
- OLED display with 4 touch buttons for easy configuration
- Security lock against unauthorized menu access
- Convection cooling for noise-free performance

IP65 · LED TECHNOLOGY · RGBW · 512 DMX · RDM

STAND ALONE MODE · MASTER/SLAVE · REMOTE CONTROL · STROBE EFFECT

CLZP130LSD





ZENIT® B60 B LSD

BATTERY-POWERED W-DMX™ IP65 PAR LIGHT BLACK

- 4 x 15 W RGBW Cree LEDs with 1,900 lm total output for uniform colour mixing
- Long-life super capacity lithium-ion battery for reliable operation
- Battery management system prevents overcharging and exhaustive discharge
- Built-in 2.4 GHz W-DMX™ receiver
- Wireless DMX, standard DMX, RDM and IR control or via the four touch buttons display
- Includes two light shaping diffusers for flexible 11°, 25° or 40° beam spread options, elliptical diffuser 60° x 10° available as accessory
- 16-bit technology for high-resolution colours and dimming
- OLED display with four touch buttons for easy configuration
- Security lock against unauthorized menu access

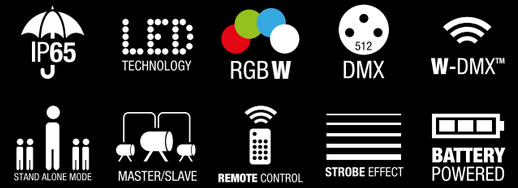

CLZB60BLSD

reddot design award



S2 IP

IP65 LED SOFTLIGHT PANEL

- 272 single SMD LEDs per colour (RGBWW) in 4-cluster arrangement
- Enables outdoor use thanks to IP65 classification
- Adjustable temperature range from 1,800 - 10,000 Kelvin
- Adjustable PWM frequency for flicker-free operation
- Manual operation on the unit or via EZRemote with the optional UNICON® (CLIREMOTE)
- Control options via DMX, W-DMX, ArtNet, sACN & RDM
- Ergonomic handles and recessed controls for safe handling
- High colour rendering values (CRI 95, TLCI 91), plus 85% coverage of Rec. 2020 colour space
- Optional dark filter (CLS2IPDARKFILTER) integrates the panel into any scenery
- Numerous accessory options such as Honey Combs, Intensifier, Barndoor and many more

IP65 · LED TECHNOLOGY · RGBW · TUNABLE WHITE · 512 DMX · W-DMX™ · RDM · STAND ALONE MODE · MASTER/SLAVE · ARTNET COMPATIBLE · sACN COMPATIBLE · SEGMENT PIXEL CONTROL · STROBE EFFECT · FLICKER FREE · CALIBRATION CHIP · Intertek

CLS2IP

reddot design award





S4 IP

IP65 LED SOFTLIGHT PANEL

- 544 single SMD LEDs per colour (RGBWW) in 4-cluster arrangement
- Enables outdoor use thanks to IP65 classification
- Adjustable temperature range from 1,800 - 10,000 Kelvin
- Adjustable PWM frequency for flicker-free operation
- Manual operation on the unit or via EZRemote with the optional UNICON® (CLIREMOTE)
- Control options via DMX, W-DMX, ArtNet, sACN & RDM
- Ergonomic handles and recessed controls for safe handling
- High colour rendering values (CRI 95, TLCI 91), plus 85% coverage of Rec. 2020 colour space
- Included: Dark filter (CLS4IPDARKFILTER) integrates the panel into any scene
- Numerous accessory options such as Honey Combs, Intensifier, Barndoor and many more

IP65 · LED TECHNOLOGY · RGBW · TUNABLE WHITE · 512 DMX · W-DMX™ · RDM · STAND ALONE MODE · MASTER/SLAVE · ARTNET COMPATIBLE · sACN COMPATIBLE · SEGMENT PIXEL CONTROL · STROBE EFFECT · FLICKER FREE · CALIBRATION CHIP · Intertek

CLS4IP



PIXBAR® 400 IP G2

IP65 RGBW LED BAR

- Available in 1m & 0.5m versions
- Simple and efficient interconNection of up to 3 units with the optional STACK-KIT
- Adjustable feet for truss-bracing positioning
- Optional VERTI-MOUNT for standing or hanging application
- Easy slide-in filter mechanism with locking mechanism
- Fanless cooling design
- High brightness and accurate colour mixing
- SPIN16® included

IP65 · LED TECHNOLOGY · RGBW · 512 DMX · W-DMX™ · RDM · STAND ALONE MODE · MASTER/SLAVE · STROBE EFFECT · FLICKER FREE

CLPB400SIPG2 · CLPB400IPG2



PIXBAR® 600 G2

IP65 RGBWAUV-LED BAR

- Available in 1m & 0.5m versions
- Simple and efficient interconnection of up to 3 units with the optional STACK-KIT
- Adjustable feet for truss-bracing positioning
- Optional VERTI-MOUNT for standing or hanging application
- Easy slide-in filter mechanism with locking mechanism
- Fanless cooling design
- High brightness and accurate colour mixing
- SPIN16® included

IP65 · LED TECHNOLOGY · RGBWA · UV · 512 DMX · W-DMX™ · RDM · STAND ALONE MODE · MASTER/SLAVE · STROBE EFFECT · FLICKER FREE

CLPB600IPG2



PIXBAR® SMD G2

IP65 LED BARS

- Available in 1m & 0.5m versions
- Simple and efficient interconnection of up to 3 units with the optional STACK-KIT
- Adjustable feet for truss-bracing positioning
- Optional VERTI-MOUNT for standing or hanging application
- Easy slide-in filter mechanism with locking mechanism
- Fanless cooling design
- High brightness and accurate colour mixing
- SPIN16® included

IP65 · LED TECHNOLOGY · RGBW · 512 DMX · W-DMX™ · RDM · STAND ALONE MODE · MASTER/SLAVE · SINGLE PIXEL CONTROL · STROBE EFFECT · FLICKER FREE · DUST PROOF HOUSING · Intertek

CLPBSMDSIPG2 · CLPBSMDIPG2



F2 FC IP

IP65 FRESNEL SPOTLIGHT WITH RGBW LED

- LED Fresnel spotlight with full-colour RGBW LED
- Stepless adjustment of colour temperature from 1,600 to 6,500 K
- Outdoor-ready thanks to IP65 classification
- True-to-life colour rendering, CRI >90 in the entire white light range
- Stepless zoom for beam angles from 18° to 55°
- 4 selectable 16-bit dimmer curves with adjustable response behaviour
- Optimised function through highly efficient heat pipe cooling and temperature-controlled fan
- Control via DMX and RDM
- Selectable pulse width modulation frequencies up to 25 kHz
- Flicker-free and low-noise operation, ideal for TV, film and theatre
- Including 8-fold sash limiter and gel frame

IP65 · LED TECHNOLOGY · RGBW · 512 DMX · RDM · STAND ALONE MODE · MASTER/SLAVE · STROBE EFFECT · FLICKER FREE · ZOOM · c ETL us Intertek

CLF2FCIP



F2 T IP

IP65 FRESNEL SPOTLIGHTS

- Outdoor-ready thanks to IP65 classification
- True-to-life colour rendering, CRI 96, TLCI 97
- Stepless zoom for beam angles from 15° to 40°
- 4 selectable 16-bit dimmer curves with adjustable response behaviour
- Optimised function through highly efficient heat pipe cooling and temperature-controlled fan
- RDM-capable
- Selectable pulse width modulation frequencies up to 25 kHz
- Flicker-free and low-noise operation, ideal for TV, film and theatre
- Including 8-fold sash limiter and gel frame

ZOOM · LED TECHNOLOGY · IP65 · Intertek · WARM WHITE · 512 DMX · RDM · STAND ALONE MODE · MASTER/SLAVE · STROBE EFFECT · FLICKER FREE

CLF2TIP



F4 FC PO IP

POLE-OPERATED IP65 FRESNEL SPOTLIGHT WITH RGBW LED

- Fresnel spotlight with full color LED (luminous flux of 10,000 lm)
- Infinitely variable color temperature adjustment (1,600-6,500 K)
- IP65-certified for permanent outdoor use
- Pole-operated for efficient use in different environments (TV studios, etc.)
- Natural color reproduction (CRI > 90)
- Continuous zoom range from 14° to 52°
- Flicker-free camera images thanks to selectable pulse width modulation frequencies up to 25 kHz
- Selectable 16-bit dimmer curves for smooth dimming
- 8-way barn door and color filter frame included
- Highly efficient cooling system and silent mode for noise-free operation

IP65 · LED TECHNOLOGY · RGBW · TUNABLE WHITE · 512 DMX · RDM · STAND ALONE MODE · MASTER/SLAVE · FLICKER FREE · ZOOM · Intertek

CLF4FCPOIP



F4 T PO IP

POLE-OPERATED IP65 FRESNEL SPOTLIGHT WITH TUNGSTEN LED

- Fresnel spotlight with tungsten LED, 3,200 K
- 24,000 lm luminous flux replaces conventional 2 kW halogen Fresnel spotlights
- IP65-certified for permanent outdoor use
- Pole-operated for efficient use in different environments (TV studios, etc.)
- Natural color reproduction (CRI: 95, TLCI: 96)
- Continuous zoom range from 14° to 43°
- Flicker-free camera images thanks to selectable pulse width modulation frequencies up to 25 kHz
- Selectable 16-bit dimmer curves for smooth dimming
- 8-way barn door and color filter frame included
- Highly efficient cooling system and silent mode for noise-free operation

IP65 · LED TECHNOLOGY · RGBW · WARM WHITE · 512 DMX · RDM · STAND ALONE MODE · MASTER/SLAVE · FLICKER FREE · ZOOM · Intertek

CLF4TPOIP



FLAT PRO 7 / 12 / 18 G2

RGBWA LED OUTDOOR SPOTLIGHTS

- Available in 7x10, 12x10, 18x10 W versions
- IP-65 certified for outdoor use
- Noiseless & flicker-free operation for theatres, broadcasting & film
- Professional Neutrik True1-compatible inputs/ outputs & IP65 DMX input/output sockets
- Robust, flat and compact metal housing
- Patented EZChase® DMX Delay: running lights effect without DMX control
- OLED display with touch-sensitive keys
- Calibrated LEDs
- Improved design with built-in carry grip
- Optionally available: SPIN 16 spigot, Omega bracket

IP65 · LED TECHNOLOGY · RGBWA · TUNABLE WHITE · 512 DMX · RDM · STAND ALONE MODE · MASTER/SLAVE · STROBE EFFECT · FLICKER FREE · DUST PROOF HOUSING

CLPFLATPRO7G2 · CLPFLATPRO12G2 · CLPFLATPRO18G2





DROP® B1

BATTERY POWERED OUTDOOR MINI UPLIGHT

- Available in black & white
- Running time up to 12 hours
- IP65 for outdoor use
- Built-in 2.4 GHz W-DMX™ receiver
- 1 x 15 W highly efficient 6-in-1 RGBWA+UV LED
- LG Chemicals rechargeable lithium-ion long-life battery with extremely high capacity
- Battery management system prevents overcharging and deep discharging
- 16-bit technology for high-resolution colours and dimming
- W-DMX and infrared control or operation via OLED display
- Diffusers for flexible beam angles 9°, 11° & 27°
- Hemispherical diffuser makes the lamp itself a design highlight

IP65 · LED TECHNOLOGY · RGBWA · UV · 512 DMX · W-DMX™ · STAND ALONE MODE · MASTER/SLAVE · WIRELESS MASTER/SLAVE · REMOTE CONTROL · FLICKER FREE · BATTERY POWERED · MULTIPLE ANGLES · ETL LISTED Intertek

CLDROPB1



DROP® B4

OUTDOOR UPLIGHTS

- Available in black and white
- Running time up to 12 hours
- Built-in 2.4 GHz W-DMX™ receiver
- 4 x 15 W RGBWAUV LEDs
- Up to 1400 lm total power output with homogeneous colour blending
- LG Chem lithium ion long-life battery with extremely high capacity
- Battery management system prevents overcharging and deep discharging
- 16-bit technology for high-resolution colours and dimming
- W-DMX and infrared control or operation via OLED display
- 2 diffusers for flexible beam angles: 22°, 32° or 45°
- Also available as a set with power supply (product no. CLDROPB4SET1) or as touring set, six units in a flightcase with charging feature (product no. CLDROPB4SET2)
- IR remote control included (Art.-No.: CLQSREMOTE2)

IP65 · LED TECHNOLOGY · RGBWA · UV · 512 DMX · W-DMX™ · STAND ALONE MODE · MASTER/SLAVE · WIRELESS MASTER/SLAVE · REMOTE CONTROL · FLICKER FREE · BATTERY POWERED · MULTIPLE ANGLES · Intertek

CLDROPB4

INDOOR STATIC LIGHTS

SHOW LASERS & EFFECTS 178
ARCHITECTURAL OUTDOOR LIGHTS 202
ARCHITECTURAL INDOOR LIGHTS 212
LIGHTING TOOLS 230
ICON LEGEND / REGISTER 256



Rhino Arena, United Kingdom 2025



P6

LED PROFILE SPOTLIGHT WITH FULL COLOUR LED

- Future-proof LED Profile Spotlight meeting coming EU regulations
- 16,000 lm luminous flux replaces conventional 2.5 kW halogen profile lights
- 600 W RGBALC LED (RGB, Amber, Lime, Cyan)
- High CRI (98 @ 5,600 K) and TLCI (94 @ 5,600 K) for natural colour rendering
- Seamless colour temperature adjustment from 1,800 K to 10,000 K
- Extremely precise, calibrated XColour™ colour mixing
- Manually operated zoom range (5° - 50°) and additional focus
- Protected and registered stepless, linear frost for versatile and seamless beam shaping
- 360° rotatable four-blade framing system
- Dual slot-in system for flexible combination of iris and gobo holder, with manual rotation
- Whisper-quiet operation

iDMX STICK · LED TECHNOLOGY · COB CHIP ON BOARD · RGB ALC · 512 DMX · RDM · sACN COMPATIBLE · ARTNET COMPATIBLE · FOCUS · IRIS · 4-SHUTTER FRAMING BLADES

CLP6

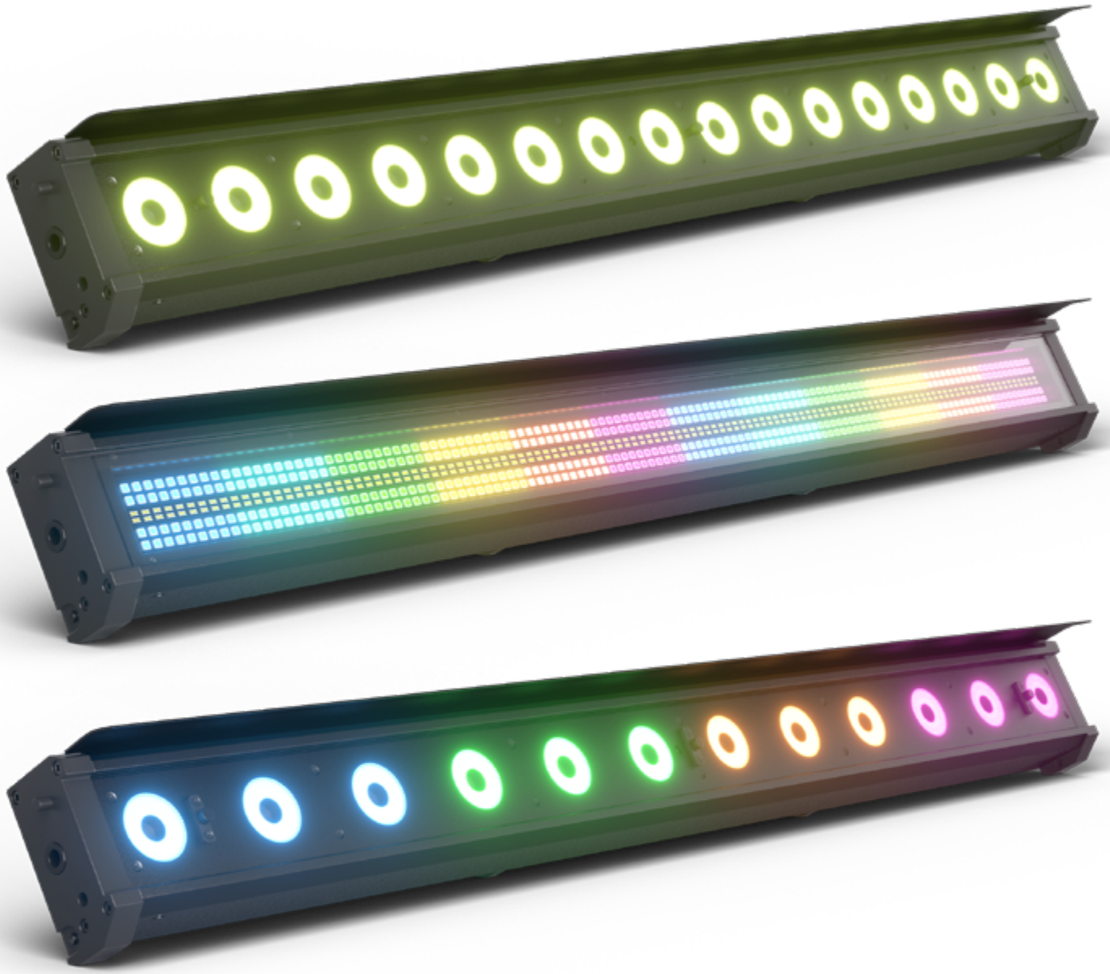

ROOT® BAR 6/SMD/BATTERY

INDOOR LED BARS

- Flexible positioning at various angles, with or with out feet
- Magnetic Quick Alignment System for precise alignment of multiple units
- Includes frost filter, neon tube filter, and glare shield for versatile lighting effects
- Control via DMX, or W-DMX (with optional Cameo iDMX Stick)
- Patented EZchase® DMX delay function for chase effects
- 16-bit resolution for smooth dimming and high-performance RGBWA-UV LEDs
- Power input via Seetronic and DMX connectors for daisy-chaining multiple units
- Silent, fanless cooling design ideal for noise-sensitive environments

EZChase® · LED TECHNOLOGY · RGBW · RGBWA · UV · 6 IN 1 LED · 512 DMX · RDM · STAND ALONE MODE · MASTER/SLAVE · SINGLE PIXEL CONTROL · iDMX STICK

CLROOTBAR6 · CLROOTBARSMD · CLROOTBARBATTERY



P2 FC

LED PROFILE SPOTLIGHT WITH FULL-COLOUR LED

- Full-colour LED profiler with 230 W RGBAL COB LED
- High CRI (>94Ra) and TLCI (>93) for natural colour rendering
- 17,000 lm luminous flux replaces conventional profile spotlight with 750 W halogen lamp
- Stepless adjustment of colour temperature 1,800 - 8,000 K
- Interchangeable fixed optics (19°, 26°, 36°, 50°) and zoom optics (15°-30°, 25°-50°)
- Integrated presets for LEE colour filters
- Integrated calibration chip for uniform colour reproduction
- Dim-to-warm function to emulate traditional light sources
- Control via DMX, RDM or W-DMX (via optional Cameo iDMX Stick)
- Silent fan with different fan modes for every application area

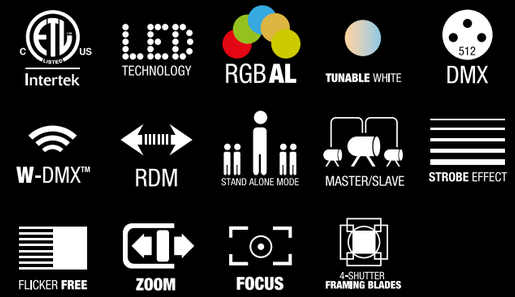

CLP2FC



P2 T

LED PROFILE SPOTLIGHT WITH TUNGSTEN LED

- LED profiler with 230 W Tungsten COB LED
- High CRI (>97Ra) and TLCI (>93) for natural colour rendering
- 14,000 lm luminous flux replaces conventional profile spotlight with 750W HPL bulb
- Colour temperature: 3,200 K (warm white)
- Interchangeable fixed optics (19°, 26°, 36°, 50°) and zoom optics (15°-30°, 25°-50°)
- Time-saving Quicklight function with push encoder operation
- Selectable pulse width modulation (up to 25 kHz) for flicker-free operation
- Control via DMX, RDM or W-DMX (via optional Cameo iDMX Stick)
- Silent fan with different fan modes for every application area



CLP2T

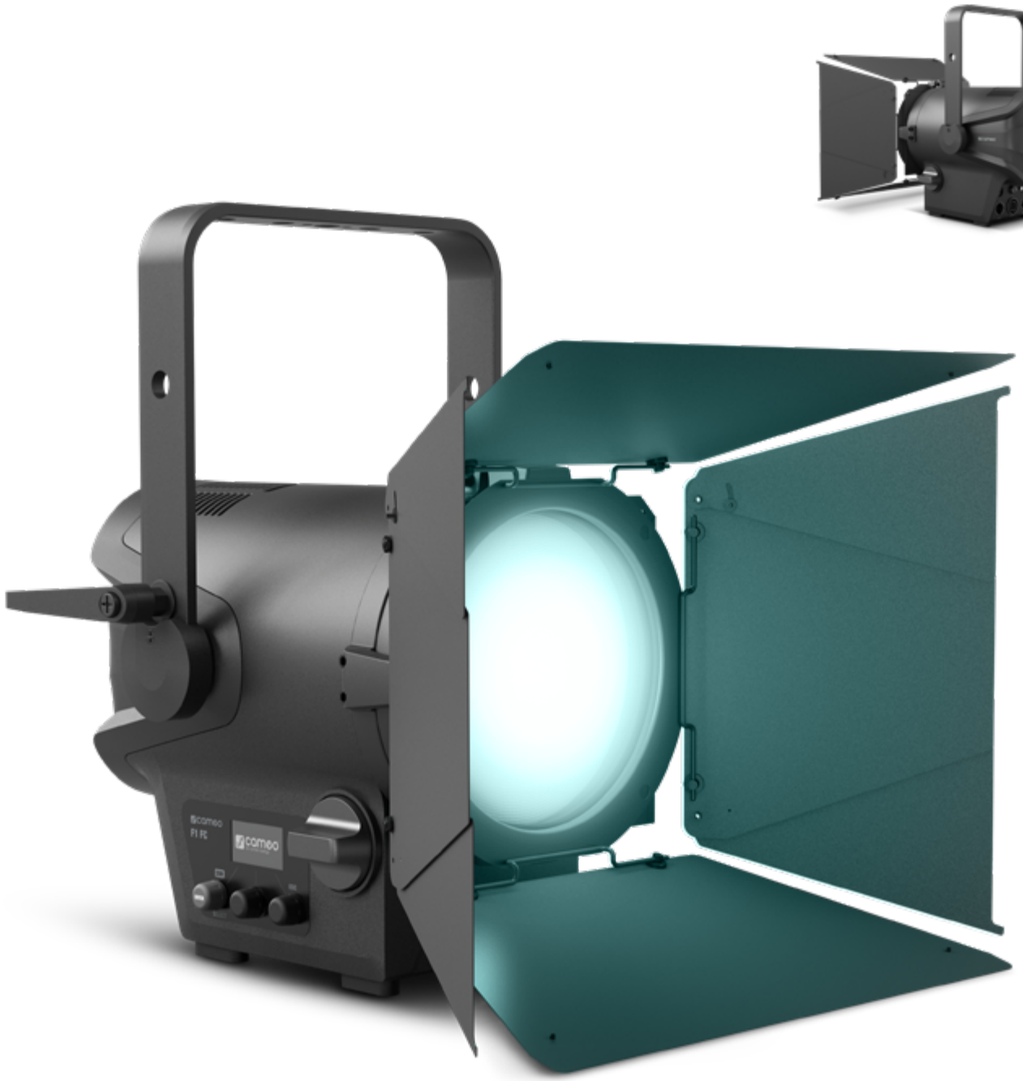

F1 FC

COMPACT FULL-COLOR FRESNEL SPOTLIGHT WITH RGBW-LED

- Full-color Fresnel spotlight with RGBW-LED
- 2,600 lm luminous flux replaces conventional 650W halogen Fresnel spotlights
- Powerful, vibrant color reproduction & continuous setting of the color temperature 1600 - 6500 K, CRI > 90
- Adjustable green-magenta correction
- Continuously variable zoom range (15° to 53°)
- Flicker-free camera images thanks to selectable pulse-width modulation up to 25 kHz
- Four selectable dimmer curves with adjustable response
- Highly efficient cooling system and silent mode for noise-free operation
- 8-way barn door and gel frame included
- Compact and lightweight design for mobile applications
- Optionally expandable with the V-mount battery plate for battery operation

Intertek · LED TECHNOLOGY · RGBW · 512 DMX · RDM

STAND ALONE MODE · MASTER/SLAVE · STROBE EFFECT · FLICKER FREE · ZOOM

CLF1FC



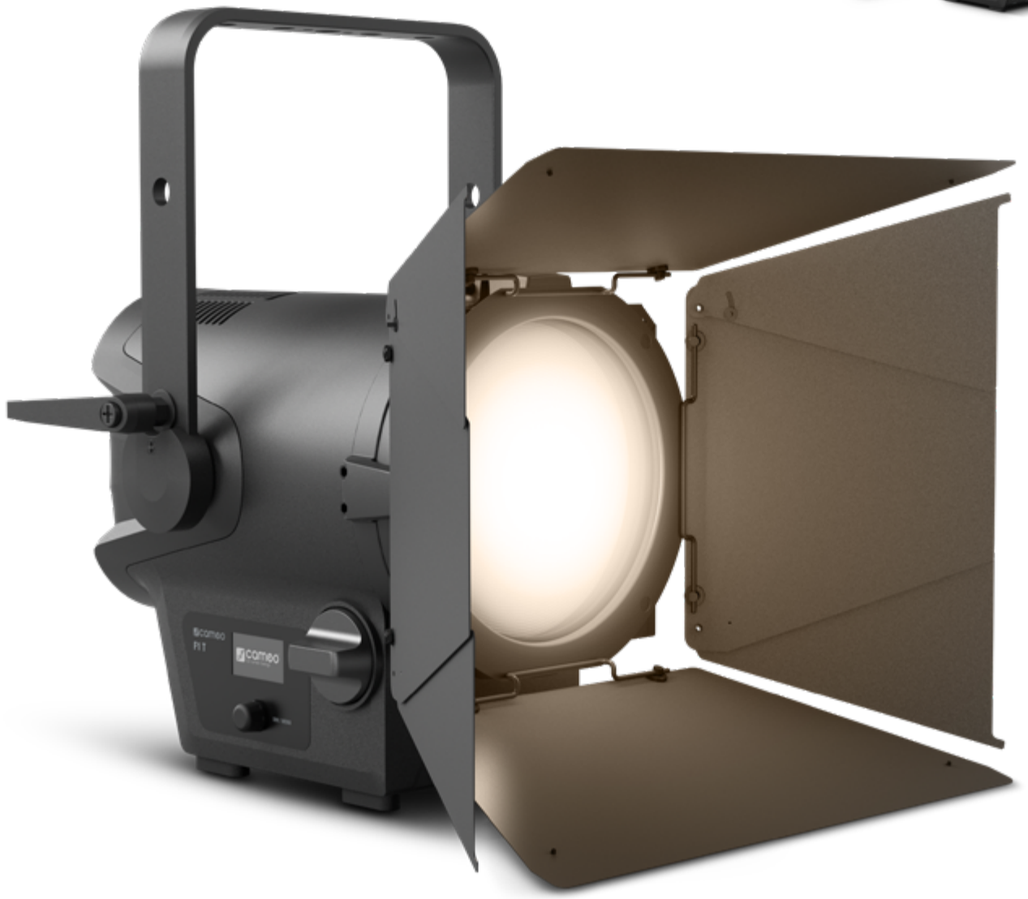

F1 T

COMPACT FRESNEL SPOTLIGHT WITH TUNGSTEN LED

- Fresnel spotlight with tungsten LED, 3000 K
- 4,800 lm luminous flux replaces conventional 650 W halogen Fresnel spotlights
- Natural colour reproduction (CRI: 98)
- Continuously variable zoom range (15° to 53°)
- Flicker-free camera images thanks to selectable pulse-width modulation up to 25 kHz
- Four selectable dimmer curves with adjustable response
- Highly efficient cooling system and silent mode for noise-free operation
- 8-way barn door and gel frame included
- Compact and lightweight design for mobile applications
- Optionally expandable with the V-mount battery plate for battery operation

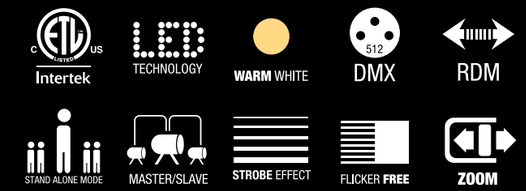

CLF1T



F2 FC

PROFESSIONAL HIGH-POWER FRESNEL WITH RGBW LED

- Full colour Fresnel with special RGBW LED and a CRI of over 90
- Seamless colour temperature adjustment from 1,600 K to 6,500 K
- Adjustable green-magenta correction
- Brilliant colours and precise white tone adjustment
- Continuous zoom for beam angles from 18° to 55°
- Four selectable 16-bit dimmer curves with adjustable response
- Highly efficient cooling thanks to a heatpipe and temperature-controlled fan
- Control via DMX and RDM
- Selectable pulse width modulation frequencies up to 25 kHz
- Flicker-free and noiseless operation, ideal for TV, film, photography studios and theatre
- Includes 8-way barndoor and gel filter frames

STROBE EFFECT · LED TECHNOLOGY · RGBW · TUNABLE WHITE · 512 DMX · RDM · STAND ALONE MODE · MASTER/SLAVE · FLICKER FREE · ZOOM · Intertek

CLF2FC



F2 FC+

SPECTRUM-OPTIMISED FRESNEL SPOTLIGHT WITH RGBAL LED

- Full colour Fresnel with RGBAL LED
- High CRI (>90) and TLCI (>93) for natural colour rendering
- Seamless colour temperature adjustment from 1,600 K to 6,500 K
- Adjustable green-magenta correction
- Brilliant colours and precise white tone adjustment
- Continuous zoom for beam angles from 18° to 55°
- Four selectable 16-bit dimmer curves with adjustable response
- Flicker-free and noiseless operation, ideal for TV, film, photography studios and theatre
- Flexible control via DMX/RDM, Art-Net, sACN, W-DMX and CRMX
- Includes 8-way barndoor and gel filter frames

Intertek · LED TECHNOLOGY · RGBAL · 512 DMX · RDM · STAND ALONE MODE · MASTER/SLAVE · FLICKER FREE · ZOOM · STROBE EFFECT · UNICON

CLF2FCPLUS



F2 T

LED TUNGSTEN FRESNEL SPOT LIGHT

- Tungsten LED Fresnel with 3,200 K colour temperature and 12,500 lm output
- Perfect replacement for conventional 1 kW Fresnels
- Faithful colour reproduction, CRI rating of 96, TLCI of 97
- Continuously variable zoom for 15° to 40° beam spread
- 16-bit dimming with 4 selectable curves and adjustable response
- Super efficient heat pipe cooling and temperature controlled fan for optimum operation
- RDM enabled
- Selectable PWM frequencies up to 25 kHz
- Flicker-free and silent operation, ideal for TV, film and theatre applications
- Includes 8-way barn door and gel frame

Intertek · LED TECHNOLOGY · WARM WHITE · 512 DMX · RDM

STAND ALONE MODE · MASTER/SLAVE · FLICKER FREE · ZOOM · STROBE EFFECT

CLF2T



F2 FC PO

POLE-OPERATED FRESNEL SPOTLIGHT WITH RGBW LED

- Full Colour Fresnel with special RGBW LED and CRI > 90 constantly
- Easy to operate from the floor with a pole for pan, tilt and zoom
- Seamless colour temperature adjustment from 1,600 K to 6,500 K
- Adjustable green-magenta correction
- Brilliant colours and precise white tone adjustment
- Continuous zoom for beam angles from 18° to 55°
- Four selectable 16-bit dimmer curves with adjustable response
- Highly efficient cooling thanks to a heatpipe and temperature-controlled fan
- Control via DMX and RDM
- Selectable pulse width modulation frequencies up to 25 kHz
- Flicker-free and noiseless operation, ideal for TV, film, photography studios and theatre
- Includes 8-way barn door and gel filter frames

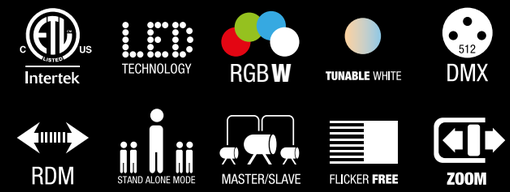

CLF2FCPO



F2 T P0

POLE-OPERATED FRESNEL SPOTLIGHT WITH TUNGSTEN LED

- Tungsten LED Fresnel with 3,200 K colour temperature and 12,500 lm output
- Easy control from the base by using a bar for pan, tilt and zoom
- Perfect replacement for conventional 1 kW Fresnels
- Faithful colour reproduction, CRI rating of 96, TLCI of 97
- Continuously variable zoom for 15° to 40° beam spread
- 16-bit dimming with 4 selectable curves and adjustable response
- Super efficient heat pipe cooling and temperature controlled fan for optimum operation
- RDM enabled
- Selectable PWM frequencies up to 25 kHz
- Flicker-free and silent operation, ideal for TV, film and theatre applications
- Includes 8-way barn door and gel frame

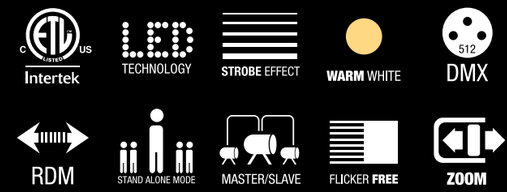

CLF2TP0



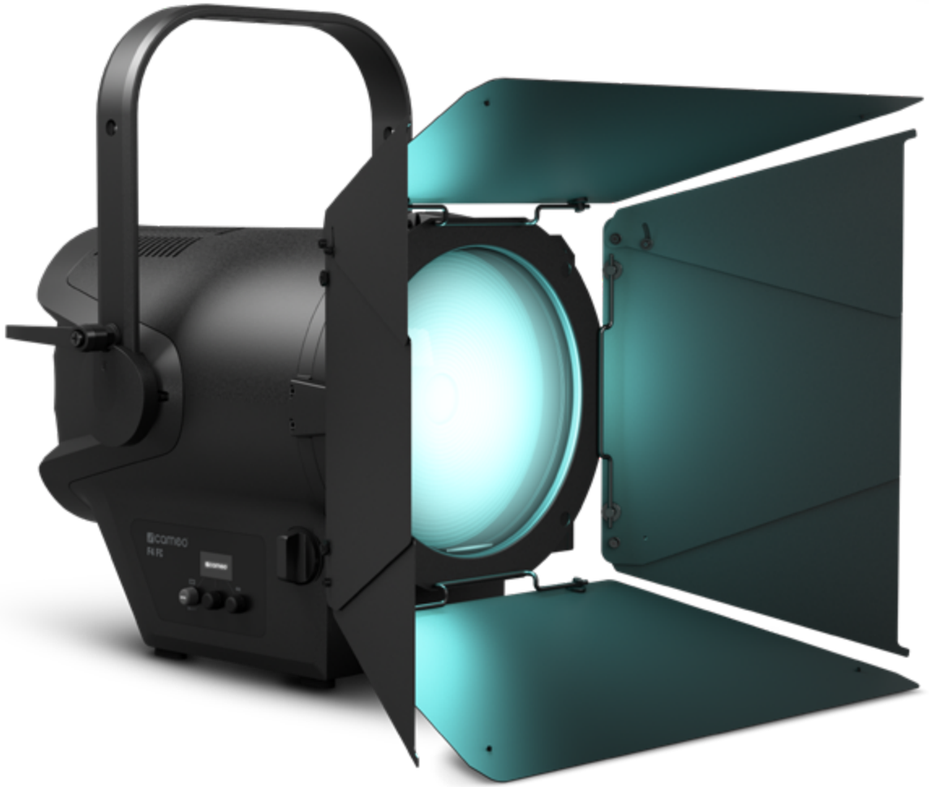

F4 FC

HIGH-PERFORMANCE RGBW LED FRESNEL SPOTLIGHT

- Full-colour LED Fresnel spotlight with 10,500 lm luminous flux
- Seamless colour temperature adjustment from 1,600 to 6,500 K, CRI >90
- Continuous zoom for beam angles from 12° to 40°
- 16-bit technology for high-resolution dimming
- Highly efficient heat pipe cooling with temperature-controlled fan
- RDM-capable with silent mode for studio use
- Four selectable dimmer curves with adjustable response
- Flicker-free and silent operation, ideal for TV, film and theatre
- Quicklight function to save time when setting lights
- 8-way barndoor and colour filter frames included

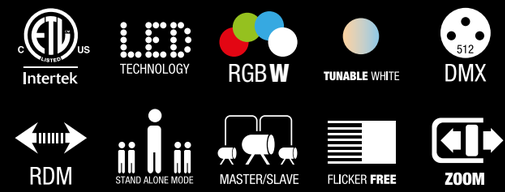

CLF4FC



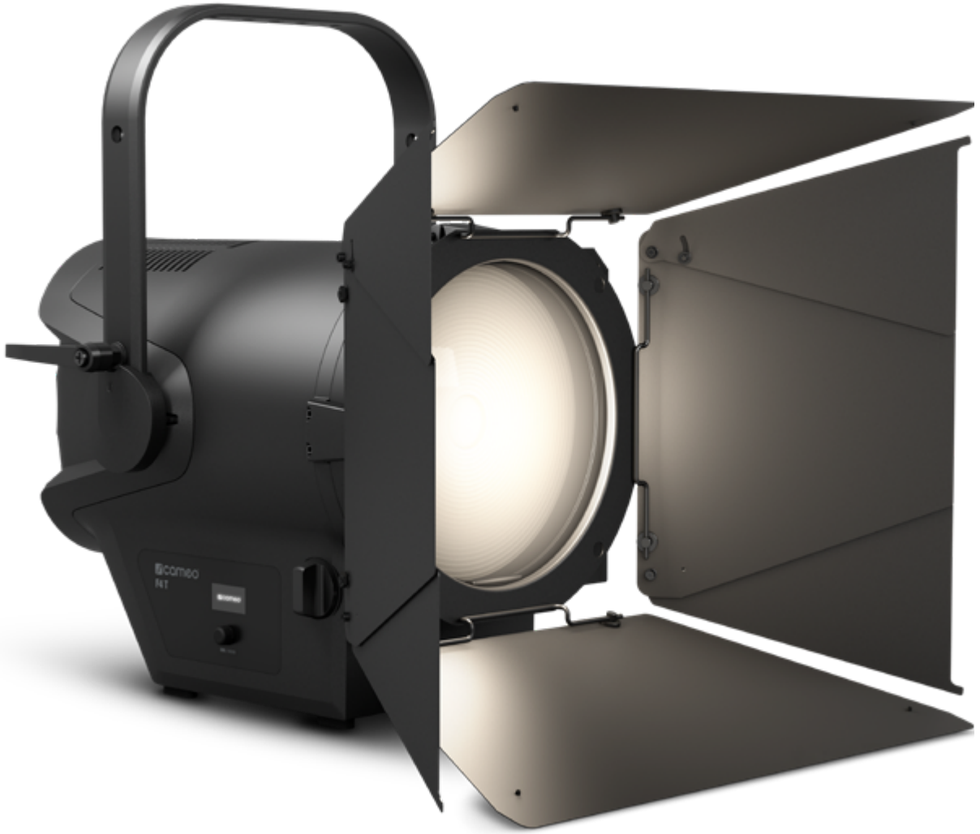

F4 T

HIGH-POWER FRESNEL SPOTLIGHT WITH TUNGSTEN LED

- Tungsten LED Fresnel spotlight with 29,500 lm total power output, replaces conventional 2 kW halogen Fresnel
- Lifelike colour reproduction, CRI rating of 96, TLCI of 96
- Continuous zoom for beam angles from 12° to 40°
- Four selectable 16-bit dimmer curves with adjustable response
- Highly efficient cooling thanks to a heatpipe and temperature-controlled fan
- Control via DMX or RDM, silent mode for studio use
- Selectable pulse width modulation frequencies up to 25 kHz
- Flicker-free and noiseless operation, ideal for TV, film, photography studios and theatre
- Quicklight function to save time when setting lights
- 8-way barndoor and colour filter frames included

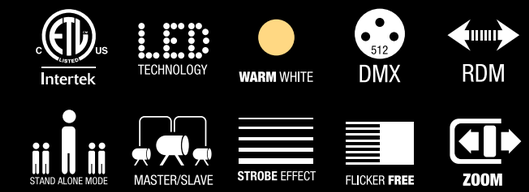

CLF4T



LUXIS® FC

FULL COLOUR LED PAR 200 W RGBALC

- Static spotlight with RGBALC single source COB light source
- Compatible with the patented SPIN16® technology (CLZSPIN16)
- No multishadows or unsightly colour edges
- High CRI 94Ra, strong light output of over 8500lm
- CCT infinitely variable from 1900K - 8000K
- Strong primary colours and beautiful pastel shades
- Easily exchangeable front lens for beam angles between 9° and 48°
- Push encoder on the back for simple and quick operation of the most important functions such as dimmer, CCT or Green-Magenta Shift
- Very quiet fan with different fan modes for every application purpose
- Calibrated LED for cross-batch colour fidelity
- USB port for optionally available iDMX® stick

Intertek · LED TECHNOLOGY · RGBAL · DMX 512 · W-DMX™ · RDM · STAND ALONE MODE · MASTER/SLAVE · iDMX STICK · STROBE EFFECT · FLICKER FREE · MULTIPLE ANGLES · CALIBRATION CHIP

CLLUXISFC



STUDIO PAR G2

LED PAR SPOTLIGHTS

- Available in RGBW, RGBWAUV
- Revised design with many workflow optimisations
- Selectable pulse width modulation (up to 25 kHz) for flicker-free operation
- Virtually silent operation in “Silent Fan Mode”
- Intuitive holding mechanism for colour filter frames
- Wireless control via W-DMX™ via optional Cameo iDMX Stick
- Simple configuration via OLED display
- PowerCON compatible power connector
- Fold-out 16 mm TV spigot (SPIN16®) can be retrofitted as an option

EZChase® · LED TECHNOLOGY · RGBWA · RGBW · TUNABLE WHITE

UV · 512 DMX · RDM · STAND ALONE MODE · MASTER/SLAVE

WIRELESS MASTER/SLAVE · iDMX STICK · SOUND TO LIGHT · STROBE EFFECT · FLICKER FREE

CLPST4G2 · CLPST6G2





ROOT® PAR 4

7 X 4 W RGBW PAR SPOTLIGHT

- Powerful 7 x 4 W quad-colour LED PAR can with 1350 lm light output
- Excellent RGBW colour mixing
- Lenses optimised for even light intensity
- DMX and power input and output for daisy-chaining several devices
- Exclusive, patented EZchase® DMX delay feature for simple chase effects
- PowerCON-compatible power connection
- Configuration via four keys and OLED display
- Built-in microphone for sound control
- USB port for iDMX® stick for wireless DMX connection via W-DMX™
- Flat, compact ABS housing with rubber feet
- Twin mounting bracket included, tilt adjustment screw for uplighting

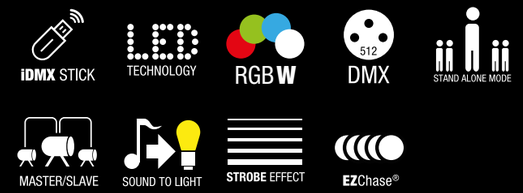

CLROOTPAR4 · CLROOTPAR4WH



ROOT® PAR 6

6 X 12 W RGBAW + UV PAR SPOTLIGHT

- Powerful 6 x 12 W hex-colour LED PAR can with 1800 lm light output
- Excellent RGBAW-UV colour mixing
- High-quality, enlarged lenses for even light intensity and maximum output
- DMX and power input and output for daisy-chaining several devices
- Exclusive, patented EZchase® DMX delay feature for simple chase effects
- PowerCON-compatible power connection
- Configuration via four keys and OLED display
- Built-in microphone for sound control
- USB port for iDMX® stick for wireless DMX connection via W-DMX™
- Flat, compact ABS housing with rubber feet
- Twin mounting bracket included, tilt adjustment screw for uplighting

EZChase® · LED TECHNOLOGY · RGBWA · UV · 512 DMX · STAND ALONE MODE · MASTER/SLAVE · SOUND TO LIGHT · STROBE EFFECT · iDMX STICK

CLROOTPAR6 · CLROOTPAR6WH



ROOT® PAR TW

7 X 4 W TUNABLE WHITE LED PAR SPOTLIGHT

- 7 x 4-Watt white light LED with 1,380 lm
- Colour temperature continuously adjustable from 3100 K to 6500 K
- Daisy chain series connection of multiple devices via DMX and power connections
- Patented EZchase® DMX delay function for chase effects
- Four-button configuration and OLED display
- PowerCON-compatible power supply
- USB port for iDMX® stick for wireless DMX transmission via W-DMX™
- Integrated microphone for sound and music synchronisation
- Two-way mounting bracket included, tilt adjustment screw for uplighter application
- IR remote control available as an option (item no. CLPFLAT1REMOTE)

EZChase®
LED TECHNOLOGY
TUNABLE WHITE
512 DMX
STAND ALONE MODE
MASTER/SLAVE
REMOTE CONTROL
SOUND TO LIGHT
STROBE EFFECT
FLICKER FREE
iDMX STICK

CLROOTPARTW





ROOT® PAR BATTERY

5 × 4 W BATTERY POWERED RGBW LED PAR SPOTLIGHT

- 5 × 4 W Quad Color RGBW LED with 1,000 lm
- Lenses optimized for even light intensity
- DMX and power input and output for daisy-chaining several devices
- Exclusive, patented EZchase® DMX delay feature for simple chase effects
- Powerful lithium-ion battery for 5+ hours of mobile operation
- USB port for iDMX® stick for wireless DMX transmission via W-DMX™
- Built-in microphone for sound control
- Flat, compact ABS housing with rubber-coated feet
- Twin mounting bracket included, tilt adjustment screw for uplighting applications
- IR remote control available as an option (item no. CLPFLAT1REMOTE)

iDMX STICK · LED TECHNOLOGY · RGBW · 512 DMX · STAND ALONE MODE

MASTER/SLAVE · REMOTE CONTROL · SOUND TO LIGHT · STROBE EFFECT · EZChase®

BATTERY POWERED

CLROOTPARBAT



TS 200 FC

THEATER SPOT WITH FRESNEL LENS AND 200 W 6-IN-1 LED

- Wide application range thanks to RGBALC LED for powerful colours, variably adjustable colour temperatures between 2800 k and 8000 k, and excellent CRI>90 colour reproduction
- Incredible versatility with continuously variable zoom beam angle (14° to 50°)
- Outstanding quality on any stage thanks to adjustable refresh rate for flicker-free projection
- Operation via DMX, RDM, standalone and master/slave
- Perfect for demanding requirements due to robust metal casing and temperature-controlled fan
- Fitted with rotating barn door and colour filter frame

ZOOM · LED TECHNOLOGY · COB CHIP ON BOARD · 6 IN 1 LED · RGB WAL

512 DMX · RDM · STAND ALONE MODE · MASTER/SLAVE · STROBE EFFECT

FLICKER FREE

CLTS200FC



TS 60 W RGBW

THEATRE SPOTLIGHT WITH PC LENS AND 60W RGBW LED

- High-intensity 60 W RGBW COB LED
- Plano-convex lens
- Continuously adjustable manual zoom with beam angle of 9° to 41°
- RDM enabled
- 19,800 lux @ 1 m
- Flicker-free projection
- Rugged metal housing
- Includes rotatable wing limiter and colour filter frame

STROBE EFFECT · LED TECHNOLOGY · COB CHIP ON BOARD · RGBW · STAND ALONE MODE

512 DMX · RDM

CLTS60WRGBW



X3 TW

EXHIBITION LAMP WITH TUNABLE WHITE LEDS

- 31 x 15 W Tunable White LEDs (6,800 K)
- High light output: 21,000 lm
- Low weight: 5.5 kg
- Selectable pulse width modulation (up to 25 kHz) for flicker-free operation
- Narrow beam angle of 8° for precise illumination
- Optional filters for 20°, 50°, 80°, 10° x 60° beam angles
- Simple configuration via rotary-push encoder and OLED display
- IP20 protection class

FLICKER **FREE** · LED TECHNOLOGY · **TUNABLE** WHITE · **DAYLIGHT** · 512 DMX · RDM · STAND ALONE MODE · MASTER/SLAVE · **STROBE** EFFECT

CLX3TW



Q-SPOT® 15 RGBW

COMPACT SPOT LIGHT WITH 15W RGBW LED

- Compact LED spot light with single 15 watt quad LED
- 2 additional lenses for beam angles of 4.5°, 10° or 25°
- RDM capable
- 16-bit technology for high definition colours and ultra smooth dimming
- Flicker free, ideal for motion picture and TV applications
- Colour temperature correction
- 4 high resolution dimming curves with adjustable response
- 5 modes of DMX control, sound activation plus master, slave and standalone capability
- Infrared remote control included
- 4-button OLED display for easy configuration
- Convection cooling for noise-free performance

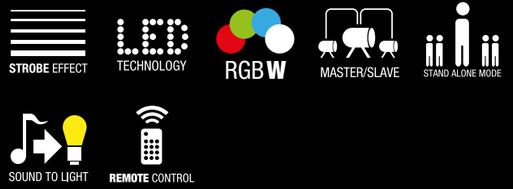

CLQS15RGBW · CLQS15RGBWWH



Q-SPOT® 40 RGBW

COMPACT SPOTLIGHT WITH 40W RGBW LED

- Compact spotlight with single 40W Osram quad LED
- Custom lens with 4.5° beam spread for uniform light intensity
- Includes 2 replacement lenses for 10° or 25° beam angles
- RDM enabled
- 16-bit technology for high definition colours and ultra smooth dimming
- Flicker free, ideal for motion picture and TV applications
- Colour temperature correction
- 4 high resolution dimming curves with adjustable response
- 5 modes of DMX control, sound activation plus master, slave and standalone capability
- Infrared remote control available as accessory
- 4-button OLED display for easy configuration
- Convection cooling for noiseless performance

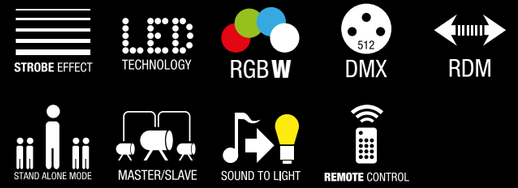

CLQS40RGBW





THUNDER® WASH 100 RGB

3 IN 1 STROBE, BLINDER AND WASH LIGHT 132 X 0.2 W RGB

- Strobe, Blinder and Wash Light all in one
- 132 RGB SMD LEDs
- 1 to 30 flashes/sec adjustable
- DMX, Sound- and manual control
- Master, Slave and Standalone operation
- Rugged metal housing with universal mounting bracket
- Low power consumption

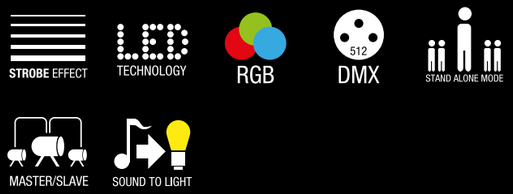

CLTW100RGB





THUNDER® WASH 600 RGB

3 IN 1 STROBE, BLINDER AND WASH LIGHT 648 X 0.2 W RGB

- Strobe, Blinder and Wash Light all in one
- 648 RGB SMD LEDs
- 1 to 30 flashes/sec adjustable
- DMX, Sound- and manual control
- Master, Slave and Standalone operation
- Rugged metal housing with universal mounting bracket

STROBE EFFECT · LED TECHNOLOGY · RGB · MASTER/SLAVE · SOUND TO LIGHT · UV · 512 DMX · STAND ALONE MODE

CLTW600RGB





THUNDER® WASH 600 RGBW

3 IN 1 STROBE, BLINDER AND WASH LIGHT

- Strobe, Blinder and Wash Light in a single fixture
- Massive total output of 6,700 lm
- DMX, sound activation and manual control
- Blue & white power twist connectors for professional power linking, powerCON compatible
- Rugged all-metal housing with universal mounting bracket
- 648 RGBW SMD LEDs 0.2 W
- Strobe adjustable from 1 to 30 flashes/sec
- Standalone and master/slave operation
- 4-button colour LCD for easy menu navigation and configuration

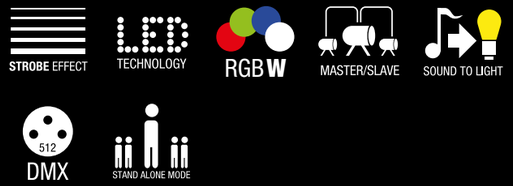

CLTW600RGBW





THUNDER® WASH 600 UV

LED UV WASHLIGHT, 130 W

- 130 W LED power
- Wide 75° flood angle
- DMX, sound activation and manual control
- Flicker free, perfect for on-camera applications
- Rugged all-metal housing with universal mounting bracket
- 648 UV SMD LEDs 0.2 W with approx. 25,000 h life expectancy
- 395 nm wavelength for maximum fluorescence
- Standalone and master/slave operation
- 4-button LED display for easy menu navigation and configuration

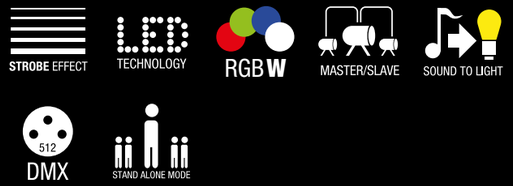

CLTS600UV





MATRIX PANELS

5 X 5 LED MATRIX PANEL WITH SINGLE PIXEL CONTROL

- 5 x 5 Matrix Panel with single pixel control
- 25 x 10 W RGB
- 5 DMX modes, sound activation and built-in auto run programs
- Master, slave and standalone capability
- Blinder, chase and strobe effects
- Alphabetic character and numeral mapping
- 4 selectable dimming curves
- Flicker-free operation
- Ultra flat housing with low-noise fan
- Even more impressive in multiples

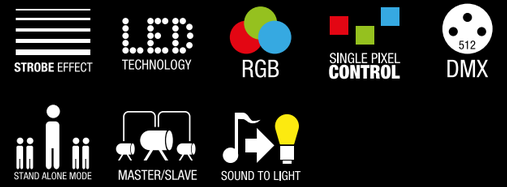

CLMP10WRGB



CL 200 G2

LED SPOTLIGHT WITH WHITE 200 W COB LED AND ADJUSTABLE COLOR TEMPERATURE

- Spotlight with 200W white COB LED
- Colour temperature adjustable from 3,200 - 7,800 K
- 12,000 lm luminous flux, 32,000 lx @ 1 m
- Flicker free, ideal for motion picture and TV applications
- DMX control, master/slave and standalone capability
- 30 Hz high-speed strobe function
- 4-button LCD display for easy configuration
- Ready for daisy chaining and power linking

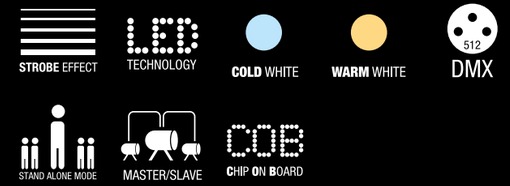

CL200G2

SHOW LASERS & EFFECTS

ARCHITECTURAL OUTDOOR LIGHTS	202
ARCHITECTURAL INDOOR LIGHTS	212
LIGHTING TOOLS	230
ICON LEGEND / REGISTER	256



Vortex Festival, Germany 2025



INSTANT AIR 3000

WIND MACHINE WITH VARIABLE FAN SPEED AND WIND DIRECTION

- Powerful professional wind machine
- Maximum air flow rate of 77 m³ per minute
- Suitable for the use with fog-, snow- and bubble-machines
- Fan speed adjustable in 1% steps from 1 to 100
- Continuously variable directional adjustment of the air flow
- DMX control or stand-alone operation
- Remote control included
- Floor installation and suspension on trusses

CLIA3000





INSTANT HAZE 1400 G2

HAZER WITH MICROPROCESSOR CONTROL

- Microprocessor controlled 1500 Watt Hazer
- Max. output volume 850 m³ per minute
- Long-lasting evaporation tube made of stainless steel 316
- Automatic self-cleaning
- Output and fan individually adjustable in 100 increments
- 2-channel DMX control and standalone mode
- Whisper-quiet operation
- Ideal for TV, film, theatre, discotheques and live events

512 DMX

STAND ALONE MODE

CLIH1400G2





INSTANT HAZE 1500 T G2

HAZER WITH MICROPROCESSOR CONTROL

- Microprocessor controlled 1500 Watt Hazer
- Rugged road case
- Max. output volume 1050 m³ per minute
- Long-lasting evaporation tube made of stainless steel 316
- Automatic self-cleaning
- Output and fan individually adjustable in 100 increments
- 2-channel DMX control and standalone mode
- Whisper-quiet operation
- Ideal for TV, film, theatre, discotheques and live events

512 DMX

STAND ALONE MODE

CLIH1500TG2



INSTANT FOG 1700 T PRO

HIGH OUTPUT 1,700 W TOURING FOG MACHINE

- 1700 watt high output touring fogger
- Built into a rugged road case
- DMX control plus standalone operation
- High-contrast LC display
- Master/Slave Mode
- Integrated fluid canister drawer
- Integrated 100 mm hose adapter
- Automatic shutdown prevents pump damage when fluid tank is empty
- Ideal for live events, discotheques, theatres, TV and film productions

512 DMX

REMOTE CONTROL

STAND ALONE MODE

CLIF1700PRO



LEYA 2000 / 3000

FULL DIODE SHOW LASERS

- Available with 3.000 mW total output (R: 600 mW, G: 800 mW, B: 1600 mW) and 2.000 mW total output (R: 400 mW, G: 600 mW, B: 1000 mW)
- Dust-proof aluminium housing for minimum maintenance
- Scan-fail safety system, interlock emergency stop signal
- 25 Kpps galvo scanner at 8° ILDA
- Control via ILDA
- Analogue modulation for up to 16 million colour shades
- Precise beam with extremely low divergence for razor-sharp projections
- Neutrik PowerCON power input and output

FULL DIODE **LASER** · RGB · **SCAN FAIL** SYSTEM · **ANALOG** MODULATION · **DUST PROOF** HOUSING

CLLLEYA2000RGB · CLLLEYA3000RGB



D FORCE 5000 RGB

PROFESSIONAL DIODE SHOW LASER

- 5,000 mW total output power
- User-adjustable beam alignment
- Dust-proof aluminium housing for minimum maintenance
- High-speed high-performance 30 Kpps galvo scanner @ 8° ILDA
- Analogue modulation for up to 16 million colour shades
- Precision beam with minimum divergence for razor-sharp projections
- Interlock emergency stop signal output
- ILDA interface for software control
- Scan Fail Safety system
- Neutrik PowerCON input and output
- Temperature-controlled low-noise fan for cool and quiet operation
- Optional adapters for Pangolin safety lenses and DiscoScan V2 360° wide-angle lens (CLLD FORCEAPSSL, CLLDFORCEAPDSL)

FULL DIODE LASER · LASER · RGB · ILDA · ANALOG MODULATION

SCAN FAIL SYSTEM · DUST PROOF HOUSING

CLLDFORCE5000RGB



WOOKIE 400 RGB

ANIMATION LASER 400 MW RGB

- Animation laser with high speed 5 Kpps stepper motor
- 60° scan angle
- Precision beams with minimum divergence
- 32 pattern presets
- DMX, sound and infrared control plus auto function
- Master, slave and standalone modes
- Display with 4 function keys for easy manual operation
- Rugged aluminium enclosure with key switch
- Includes handheld infrared remote

SOUND TO LIGHT · LASER · RGB · DMX · STAND ALONE MODE · MASTER/SLAVE

CLLWOOKIE400RGB



PHANTOM F5

1500 W HIGH OUTPUT FOG MACHINE WITH TWO-COLOR TANK ILLUMINATION

- Highly efficient heating element with 1,500 W heat output
- Short warm-up time (about 4 minutes)
- Output of up to 509 m³/min
- Two-colour tank illumination with 1.8 l capacity and level indicator
- Compatible with standard water-based fog fluid (e.g. Cameo DJ Fluid)
- Removable tank for simple filling
- DMX control and stand-alone operation
- Optimal coordination of the pump and heating, for uniform fog at any density
- Mounting bracket and multi-function remote control included
- LED display for simple configuration

512 DMX · STAND ALONE MODE · CABLE REMOTE · REMOTE CONTROL

CLPHANTOMF5



PHANTOM F3

FOG MACHINE WITH 950 W HEATING OUTPUT AND INTERNALLY ILLUMINATED FLUID TANK

- Highly efficient heating element - 950 W
- Illuminated 0.8 litre tank with level indicator
- Up to 240 m³/min output volume
- Range of fog output approx. 4 m
- LED operational status indicator lights (ready/heating)
- Cable and wireless remote included
- Works with standard water-based fog fluids
- Removable fluid tank for easier refilling
- Built-in overheating protection
- Even fog production at all intensity levels

CABLE **REMOTE** **REMOTE** CONTROL

CLPHANTOMF3



PHANTOM H2

COMPACT HAZER WITH BICOLOUR TANK ILLUMINATION AND LEVEL INDICATOR

- Highly efficient heating element (600 W), preheating: approx. 2 mins
- Bicolour 0.8 l illuminated tank with level indicator
- Output volume: 226 m³/min (max.)·
- Fluid use: only 3.5 ml/min @ 100% output performance
- Easy configuration via LED display, DMX or standalone
- Suitable for water-based hazer fluids (e.g. Cameo Haze Fluid)
- Removable fluid tank for easy refilling
- Built-in overheating protection
- Adjustable output angle with deflector
- Includes mounting bracket and remote control

CABLE REMOTE · REMOTE CONTROL · 512 DMX

CLPHANTOMH2





STEAM WIZZARD 2000

FOG MACHINE WITH RGBA LEDS FOR COLOURED FOG EFFECTS

- 1,200 W heating element and high-performance pump for powerful blasts of fog
- 12 x 10W RGBA 4-in-1 LEDs for uniform fog illumination
- Verical or horizontal mounting
- Top or bottom fluid tank placement options
- Bottom tank placement enables easy overhead installation for downward jets
- Automatic shutdown prevents pump damage when fluid tank is empty
- LED indicators for fluid tank and operating status
- 4-channel DMX control
- Includes handheld remote with illuminated buttons and controls for Continous, Timer, Manual, Fog Output, LED Brightness and Colour plus 10m cable

LED TECHNOLOGY · RGBA · 512 DMX · MASTER/SLAVE · STROBE EFFECT

CLSW2000

ARCHITECTURAL OUTDOOR LIGHTS

ARCHITECTURAL INDOOR LIGHTS	212
LIGHTING TOOLS	230
ICON LEGEND / REGISTER	256



Sagrada Familia, Spain 2024



DURA® LINE 50 / 100

IP67 INSTALL LINEAR WITH RGBW LEDS

- Efficient 14 x 4W / 28 x 4W RGBW LED
- IP67, IK08 classification and C5-M coating for permanent outdoor use
- Available in 1m / 0.5m Versions
- Various filters for different beam angles available as accessories (20°, 40°, 60°, 60°x10°)
- Accessories can be applied without breaking IP Seal
- Original Amphenol LTW connectors available (0.52m, 1.02m, 3m, 8m)
- Calibrated LEDs for excellent colour consistency
- Control via DMX, RDM or external control remote (UNICON)
- Available in 0.5m and 1.0m versions

IP67 · LED TECHNOLOGY · RGBW · 512 DMX · RDM · MASTER/SLAVE · FLICKER FREE · STROBE EFFECT

CLDL50 · CLDL100





ZENIT® W300i / W600i

OUTDOOR LED WASH LIGHT FOR FIXED INSTALLATION

- 21 × 15 W RGBW LEDs with 11,000 lm luminous flux / 40 x 15 W RGBW LEDs with 21,000 lm luminous flux for intensive homogeneous color mixing
- Configuration only possible via RDM or with the ZENIT® REMOTE DISPLAY CONTROLLER (CLZIEXDISP) - available separately
- 18° beam angle and 35° field angle without a diffuser
- Optional SnapMag® filter frames for flexible symmetric and asymmetric beam angles, installation possible without tools or securely fastened
- IP67 rating for permanent outdoor use
- C5-M certified anti-corrosion coating
- High-resolution colour mixing and dimmer response with 16-bit technology
- Control via DMX, RDM (via DMX) and automated programmes
- Temperature-controlled fans for optimised, silent operation

IP67 · LED TECHNOLOGY · RGBW · 512 DMX · RDM · STAND ALONE MODE · MASTER/SLAVE · STROBE EFFECT · FLICKER FREE · CALIBRATION CHIP · MULTIPLE ANGLES

CLZW300I · CLZW600I



DURA® SPOT 60 / 100 / 200 / 400

IP67 INSTALL SPOT WITH RGBW LED

- Efficient RGBW LED
- IP67 and IK08 classification for permanent outdoor use
- 4 sizes to fit any application
- 6° beam angle
- Various filters for different beam angles available as accessories
- Filters can be applied without breaking IP Seal
- Anti glare shield included for less light spill
- Calibrated LEDs for excellent colour consistency
- Control via DMX, RDM or external control remote (UNICON)
- Minimum LED lifetime: 50,000 hours (to >70% luminous output)

IP67 · LED TECHNOLOGY · RGBW · 512 DMX · RDM

STAND ALONE MODE · MASTER/SLAVE · STROBE EFFECT · FLICKER FREE

CLDS60 · CLDS100 · CLDS200 · CLDS400





Q-SPOT® 40i

COMPACT IP65 OUTDOOR SPOTLIGHT WITH 40 W RGBA LED

- Compact LED outdoor spotlight with single 40W RGBA LED
- IP65 rated for permanent outdoor installation
- Custom lens with 4.5° beam spread for uniform light intensity
- RDM enabled
- 360° rotatable anti-glare shield
- 16-bit technology for high definition colours and ultra smooth dimming
- 4 high resolution dimming curves with adjustable response
- 4 modes of DMX control plus master, slave and standalone capability
- OLED display with 4 touch buttons for easy configuration
- Convection cooling for noiseless performance
- Includes ground spike and 2 replacement lenses for 10° or 25° beam angles, Power & DMX IN cables and endcaps for Power & DMX I/O



CLQS40IB · CLQS40IW

ARCHITECTURAL INDOOR LIGHTS

LIGHTING TOOLS 230

ICON LEGEND / REGISTER 256



Auckland Townhall, New Zealand 2025





H1 FC

DMX-CONTROLLABLE HOUSE LIGHT WITH RGBAL LED

- 120 W RGBAL LED with total light output of 5200 lm
- 1800 to 6500 K colour temperature, CRI > 90 for optimal colour reproduction
- Adjustable beam angle from 20° to 65° via exchangeable lenses
- Completely silent operation thanks to convection cooling without fans
- Controllable via DMX, W-DMX™, RDM and optional UNICON® remote control
- RJ45 and terminal block plug for simple integration into any environment
- Combined form and function in minimalistic design
- Flicker-free operation thanks to selectable PWM frequencies up to 25 kHz
- Optional installation set and wall bracket available for ceiling and wall installation

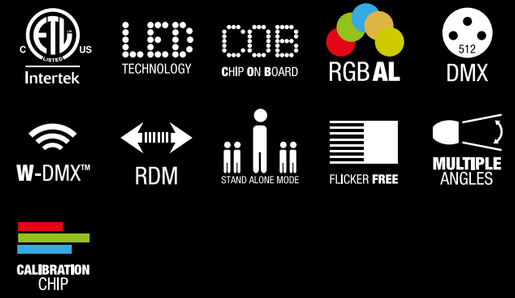

CLH1FC · CLH1FCWH





H1 T

DMX-CONTROLLABLE HOUSE LIGHT WITH WARM WHITE LED

- 80 W tungsten LED with total light ouput of 5200 lm
- 3000 K colour temperature, CRI > 97 for optimal colour reproduction
- Adjustable beam angle from 20° to 65° via exchangeable lenses
- Completely silent operation thanks to convection cooling without fans
- Controllable via DMX, W-DMX™, RDM and optional UNICON® remote control
- RJ45 and terminal block plug for simple integration into any environment
- Combined form and function in minimalistic design
- Flicker-free operation thanks to selectable PWM frequencies up to 25 kHz
- Optional installation set and wall bracket available for ceiling and wall installation



CLH1T · CLH1TWH





H2 FC

DMX-CONTROLLABLE HOUSE LIGHT WITH FULL-COLOUR LED

- 180 W RGBAL LED with 7,400 lm total output
- Colour temperature adjustable from warm white to cold white
- Adjustable beam angle from 21 ° to 64 ° using exchangeable lenses
- Completely silent operation thanks to convection cooling without fans
- Discrete installation flush with the ceiling possible thanks to optional installation kit
- Control via DMX and W-DMX™
- 5-pin XLR and terminal block connectors for simple integration into any environment
- 16-bit technology for dimming
- Combines form and function in a minimalistic design
- Flicker-free operation thanks to selectable PWM frequencies up to 25 kHz

Intertek · LED TECHNOLOGY · COB CHIP ON BOARD · RGBAL · TUNABLE WHITE · 512 DMX · W-DMX™ · RDM · STAND ALONE MODE · FLICKER FREE · MULTIPLE ANGLES

CLH2FC · CLH2FCWH





H2 T

DMX-CONTROLLABLE HOUSE LIGHT WITH RGBAL LED

- 150 W warm white LED with 10,500 lm total output
- 3,000 K colour temperature and CRI > 90 for good reproduction
- Adjustable beam angle from 20° to 60° using exchangeable lenses
- Completely silent operation thanks to convection cooling without fans
- Discrete installation flush with the ceiling possible thanks to optional installation kit
- Control via DMX and W-DMX™
- 5-pin XLR and terminal block connectors for simple integration into any environment
- 16-bit technology for high colour resolution and dimming
- Combines form and function in a minimalistic design
- Flicker-free operation thanks to selectable PWM frequencies up to 25 kHz

Intertek · LED TECHNOLOGY · COB CHIP ON BOARD · RGBAL · 512 DMX · W-DMX™ · RDM · STAND ALONE MODE · FLICKER FREE · MULTIPLE ANGLES · CALIBRATION CHIP

CLH2T · CLH2TWH



G4 FC

TRACKLIGHT WITH RGBL LED

- Tracklights with 40 W RGBL LED
- 410 lm Luminous flux
- Use on commercially available busbar systems
- Applications: Museum, retail, gastronomy and many more.
- Beam angle flexibly adjustable via magnetic filters
- Consistent and accurate color temperatures thanks to factory calibrated LED
- Optional magnetic filters (CTO, CTB, Honeycomb)
- FC & TW models compatible with DMX, W-DMX & RDM
- Selectable pulse width modulation (up to 25 kHz) for flicker-free operation
- Passive cooling for silent operation

Intertek · LED TECHNOLOGY · COB CHIP ON BOARD · RGBA · 512 DMX · W-DMX™ · RDM · STAND ALONE MODE · MASTER/SLAVE · WIRELESS MASTER/SLAVE · STROBE EFFECT · FLICKER FREE · MULTIPLE ANGLES

CLG4FC · CLG4FCWH



G4 N

TRACKLIGHT WITH NEUTRAL WHITE LED

- Tracklights with 40 W Neutral COB LED
- Colour temperature: 4,000 K (neutral white)
- 735 lm Luminous flux
- High CRI (>97Ra) for natural white light reproduction
- Use on commercially available busbar systems
- Applications: Museum, retail, gastronomy and many more.
- Beam angle flexibly adjustable via magnetic filters
- Optional magnetic filters (CTO, CTB, Honeycomb)
- Passive cooling for almost silent operation

Intertek · LED TECHNOLOGY · COB CHIP ON BOARD · NATURAL WHITE · STAND ALONE MODE · MULTIPLE ANGLES

CLG4N · CLG4NWH



G4 T

TRACKLIGHT WITH TUNGSTEN LED

- Tracklight with 25 W Tungsten COB LED
- Colour temperature: 3,000 K (warm white)
- 715 lm Luminous flux
- High CRI (>97Ra) for natural white light reproduction
- Use on commercially available busbar systems
- Applications: Museum, retail, gastronomy and many more.
- Beam angle flexibly adjustable via magnetic filters
- Optional magnetic filters (CTO, CTB, Honeycomb)
- Passive cooling for almost silent operation

Intertek · LED TECHNOLOGY · COB CHIP ON BOARD · WARM WHITE · STAND ALONE MODE · MULTIPLE ANGLES

CLG4T · CLG4TWH



G4 TW

TRACKLIGHT WITH TUNABLE WHITE LED

- Tracklight with 40 W Tunable-White COB-LED
- Colour temperature: 2,700 K - 6,500 K
- 560 lm Luminous flux
- Use on commercially available busbar systems
- Applications: Museum, retail, gastronomy and many more.
- Beam angle flexibly adjustable via magnetic filters
- Optional magnetic filters (CTO, CTB, Honeycomb)
- FC & TW models compatible with DMX, W-DMX & RDM
- Selectable pulse width modulation (up to 25 kHz) for flicker-free operation
- Passive cooling for virtually silent operation

Intertek · LED TECHNOLOGY · COB CHIP ON BOARD · TUNABLE WHITE · 512 DMX · W-DMX™ · RDM · STAND ALONE MODE · MASTER/SLAVE · WIRELESS MASTER/SLAVE · STROBE EFFECT · FLICKER FREE · MULTIPLE ANGLES

CLG4TW · CLG4TWWH

LIGHTING TOOLS

ICON LEGEND / REGISTER 256



Nature One ©JulianHuke, Germany, 2025



UNISENS®

AMBIENT LIGHT TO DMX INTERFACE

- Mobile light sensor to detect ambient light and DMX transmission
- Compact, robust IP65 aluminium housing for a long service life
- 5-pin XLR input and output for DMX connections
- USB-C connection for versatile power supply options (USB A -> USB-C cable included)
- Built-in rechargeable battery with 20 hours of battery life
- 1/4-inch mounting thread on the back for easy installation
- DMX transmission of illuminance, colour coordinates, CCT, and more
- Functions as a DMX merger to combine two DMX signals
- Backlit button for easy operation as a status display
- Currently compatible with CLIREMOTE (V1.3 or higher), CLS2IP (V1.3 or higher), CLS4IP (V1.7 or higher)

CLUNISENS



CONTROL PADS

IN-WALL MULTI-ZONE DMX CONTROLLER IN BLACK OR WHITE

- Wall-mount multi-zone lighting controller, networkable
- 1,024 DMX channels, 500 scenes, 10 zones
- Tempered glass front panel
- Scroll wheel and quick access dimmer, scene, RGB colour and speed buttons
- Full-colour display for easy setup
- Ethernet and USB connectivity
- MicroSD memory
- Power supply via Ethernet or optional power adapter (item no. CLCPACDCSE)
- ESA Mac and Windows software
- iOS and Android remote control apps

CLCPSEB · CLCPSEW



SB 6 DUAL

6-CHANNEL DMX SPLITTER / BOOSTER (3 PIN AND 5 PIN)

- Professional 6-way DMX splitter / booster
- Chassis 1U 19” rack-mount enclosure
- 6 electrically isolated XLR (3-pin / 5-pin) outputs
- DMX status indicator per channel
- Power status indicator
- Switchable 120 Ohm terminating resistor for the DMX THRU output jack
- Front and rear rack-mount angle attachment options

CLSB6D





SB 6 T RDM

6-OUTPUT DMX/RDM SPLITTER/BOOSTER WITH 3 AND 5-PIN CONNECTORS

- Professional 6-output DMX/RDM splitter/booster
- 6 optically and electronically isolated 3 and 5-pin XLR outputs
- Compact housing
- Original Neutrik® connectors for maximum reliability
- 3 x M10 threaded inserts for a variety of truss mounting options
- Power and DMX status indicators on front and rear panel
- Optional 2 U 19” rackmount frames available for one or two SB 6T RDM

CLSB6TRDM



XNODE 8

8-PORT DMX ETHERNET NODE

- Converts Art-Net and sACN to DMX for up to 8 independent universes
- Supports Art-Net 1 through 4 (DMX and RDM)
- sACN release and draft version
- 8 individually optically isolated DMX ports, each configurable as input or output
- Graphic display and encoder for easy configuration and precise display of status information
- Shortcut key for each DMX output port for direct configuration of Art-Net or sACN universe
- Web interface for status display, settings, and firmware updates
- Neutrik powerCON input and output
- Type of construction: 19” housing
- Power cord is NOT included in the delivery

CLXNODE8



UNICON®

REMOTE CONTROL FOR DMX FIXTURES

- Unit controller for configuration and control of DMX fixtures
- Bright 2.8” touch display and encoder wheel for intuitive menu navigation
- Transmits and Receives DMX/RDM signals in a DMX universe - 512 channels
- 5-pin DMX, RJ45 and USB-C connector
- Integrated Li-Ion battery, 6,500 mAh
- MicroSD card slot for saving and transferring scenes
- Reads sensor data from compatible fixtures
- Acts as firmware updater for compatible devices
- Eyelet for carrying strap or carabiner

CLIREMOTE



DVC CUE

USB TO DMX INTERFACE WITH UP TO 2048 DMX CHANNELS AND ILLUMINATED CONTROL PANEL

- 1024 DMX channels in live mode, 512 DMX channels in stand-alone mode
- Expandable from 2 to 4 DMX512 universes (2048 DMX channels)
- Intuitive backlit keyboard with 10 buttons for direct access
- 99 scenes across 5 zones and calendar triggering (only possible with optional ESApro 2 software)
- USB and Ethernet for programming/control
- User-friendly, intuitive Cameo DMX software “by Daslight” for Windows and Mac OS X as a free download
- Smart Upgrade Technology (SUT)

CLDVCCUE



DVC PRO

1024-CHANNEL USB TO DMX-INTERFACE WITH WIFI ACCESS AND CONTROL SOFTWARE

- USB interface with 1024 DMX channels in live mode (extendable via ArtNet)
- Integrated Flash memory for 256 DMX channels in standalone mode (extendable to up to 1024 channels)
- User-friendly, intuitive Cameo DMX software “by Daslight” for Windows and Max OS available for free download
- Internet connection required for hardware registration and software activation
- Over 15,000 device libraries and a built-in ScanLibrary editor for creating and editing your own device profiles
- Powerful XEEL engine for hundreds of impressive pixel and video effects and movements for moving heads and scanners
- Touchscreen control plus remote control of essential features via iOS and Android smartphones and tablets or MIDI controller
- Built-in access point for remote control via Wi-Fi in standalone mode
- Audio analyser and MIDI clock for synchronising lightshow and music speed
- Real-time programming and 3D visualisation of lightshow
- Compatible with Light Raider app on Android and iOS devices (free 30-day trial version available for download)

CLDVCPRO



DVC D5

USB TO DMX-INTERFACE AND CONTROL SOFTWARE PACKAGE

- USB interface with 512 DMX channels in live mode
- Integrated flash memory for 256 DMX channels in stand-alone mode
- Cameo D4 Express for life and Cameo D5 Express for life included
- User-friendly Cameo DMX software “by Daslight” for Windows 10&11 and Mac OS 10.15 or higher available to download free
- WiFi connection required for hardware registration and software activation
- Standalone mode upgradable to 512 DMX channels
- Over 15,000 device libraries and a built-in ScanLibrary editor for creating and editing your own device profiles
- Powerful XEEL engine for hundreds of impressive pixel and video effects and movements for moving heads and scanners
- Touchscreen control plus remote control of essential features via iOS and Android smartphones and tablets or MIDI controller
- Audio analyser and MIDI clock for synchronising lightshow and music speed
- Real-time programming and 3D visualisation of lightshow
- Compatible with Light Raider app on Android devices via USB (free 30-day trial version available for download)

CLDVCD5



iDMX STICK G2

W-DMX™ + CRMX™ RECEIVER

- Operating range up to 300 m
- Compatible with W-DMX and CRMX
- 2.4 GHz receiving frequency
- USB-A connector

CLIDMXSTICKG2



iDMX T3

W-DMX & CRMX TRANSCEIVER POWERED BY LUMENRADIO

- Transmitter & receiver mode with 512 DMX channels
- CRMX, W-DMX G3 / G4s
- DMX and RDM-capable
- 5 GHz radio band for WiFi and Bluetooth
- Configuration via app possible

CLIDMXT3

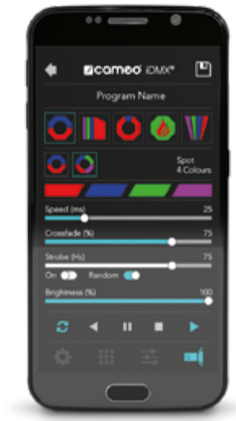



iDMX CORE

WIFI TO W-DMX™ CONVERTER

- Battery-powered WiFi to W-DMX™ converter
- Allows wireless lighting control via the Cameo iDMX® Controller App
- Receives WiFi signals from all iOS and Android devices
- 2.4 GHz W-DMX™ transmitter with an operating range of up to 300 m
- Can be used purely as a W-DMX™ transmitter via the DMX input
- Allows control of conventional DMX devices using the iDMX® Controller App via the DMX output
- Long-life LG Chem lithium-ion battery for reliable operation
- Battery management system prevents overcharging and deep discharging
- Includes power adapter charger, bag and DMX cable

CLIDMXCORE

ICON LEGEND / REGISTER



A Summer Story Festival, Spain 2025

ICONS LEGEND

LED TECHNOLOGY
LEDs are extremely advantageous for the use in lighting systems: they are bright, emit very little heat, have a very long lifetime and low energy consumption. Also, LED fixtures often weigh less than conventional fixtures.

COB LED TECHNOLOGY
The “chip-on-board” multi-LED array is a recent technology that produces a high-density large area light source with high brightness and uniform diffusion for a rich wash of colours.

DISCHARGE LAMP
Discharge lamps are highly efficient and exceptionally bright providing stable light output, good colour rendering and long lifetime.

FULL DIODE LASER
The pure diode design provides an increased life span and much higher efficiency compared to temperature-dependent DPSS laser sources.

LASER
Its marked directional impact means laser light remains bright and clearly visible over distances. Lasers are highly energy-efficient andcreate tightly clusterd, narrow beams of light that are ideal for creating pronounced lighting effects.

RGB ADDITIVE COLOUR SYSTEM
Additive colour mixes use varying amounts of red, green and blue to produce other colours and white. The RGB system is used in television, computer monitors and digital cameras to name a few.

RGB ADDITIVE COLOUR SYSTEM + WHITE LEDS
Adding white LEDs to the RGB system produces more contrast and definition and enhances the RGB generated white and pastel colours.

RGB A
Has a wide colour palette with the colours red, green, blue and amber.

RGB WA
RGB additive colour system plus white and amber LEDs.

RGB AL
This luminaire uses RGBAL colour mixing to reproduce nearly any colour and colour temperature of white.

RGB WAL
Featuring red, green, blue, white, amber and lime, RGBWAL multichip LEDs are eminently suitable to produce rich, saturated colours and and a wide spectrum of whites with excellent CRI.

RGB L
Has a wide colour palette with the colours red, green, blue and lime.

RGB ALC
Has a wide colour palette with the colours red, green, blue, amber, lime and cyan.

UV
UV or black lights are employed for decorative and artistic lighting effects.

COLD WHITE
“Cold white“ is a clean, very bright light in the 5,000 - 10,000 K range with a somewhat artifcial touch that goes well with deeply saturated primary colours. Measured in degrees of Kelvin (K), colour temperature indicates the properties of light sources.

DAYLIGHT
Daylight colour temperature.

NATURAL WHITE
Neutral white colour temperature

WARM WHITE
“Warm white“ is in the 2,000 - 4,000 K range providing a soft light with a slight touch of yellow that is natural and pleasing to the eye. Measured in degrees of Kelvin (K), colour temperature indicates the properties of light sources.

TURNABLE WHITE
The tunable white feature allows setting of a range of white tones.

DMX512
Created in 1986, DMX512 is a communications standard for lighting equipment. up to 32 DMX fixtures can be daisy-chained and controlled by a dedicated source, e.g. a lighting console. In a DMX512 daisy chain “network”, the controller is called “master” while the daisy-chained fixtures are the “slaves.”

W-DMX™
This fixture features W-DMX™ technology for wireless DMX control.

RDM-ENABLED
This fixture is RDM-enabled. The Remote Device Management protocol extension to DMX allows bi-directional communication over a standard DMX network for the convenient configuration, management and monitoring of RDM devices connected to a dedicated RDM controller.

RJ 45
Equipped with an RJ45 connection that enables the Ethernet connection and thus control via a network protocol.

STANDALONE MODE
In “standalone” mode, this fixture uses built-in programmes to control its functions. There is no need for a lighting console or “master” controller.

ICONS LEGEND



“MASTER” AND “SLAVE”
Simply put, this fixture is able to control or be controlled by other fixtures. In “master” mode and first in a chain, the fixture acts as a controller for fixtures (“slaves”) that are connected to its output. In “slave” mode, the input of the fixture is connected to the output of a lighting console or “master.” Fixtures that are daisy-chained to a slave’s output also act as slaves.



WIRELESS MASTER/SLAVE
Simply put, this fixture is able to control or be controlled by other fixtures. In “master” mode and first in a chain, the fixture acts as a controller for fixtures (“slaves”) that are connected to its output. In “slave” mode, the input of the fixture is connected to the output of a lighting console or “master.” Fixtures that are daisy-chained to a slave’s output also act as slaves.



ART-NET
This fixture is Art-Net compatible.



sACN
This luminaire is compatible with the sACN (Streaming ACN) protocol developed to transport DMX data over a network.



KLINGNET
Compatible with KlingNet to connect lamps together and control them synchronously without complex cabling or separate control devices.



WIFI
This device is compatible with all WiFi standards.



IDMX® APP CONTROL
Controllable via the iDMX app from Cameo®.



ANDROID
Compatible with Android.



APPLE
Compatible with Apple devices.



WINDOWS COMPATIBLE
This fixture is delivered with a software allowing control via computers running on Windows.



FOOT PEDAL REMOTE
Can be controlled via foot pedal.



CABLE REMOTE
Controllable via cable connection.



REMOTE CONTROL
Can be controlled via remote control.



EZ REMOTE
The EZ Remote function simplifies the control of Cameo® products in a clear menu for configuring various indicators of the lamp.



ILDA
ILDA (standing for „International Laser Display Association“) enables the synchronisation and control of various laser devices for the creation of precise and synchronised laser projections.



iDMX STICK
The product has an input for the iDMX stick from Cameo® and can therefore also be connected wirelessly to a DMX network.



iDMX
iDMX is used for wireless DMX connections and is a type of protocol from Cameo®.



UNICON
Compatible with the UNICON® from Cameo®. This enables the control of both in-house and cross-brand DMX spotlights. For Cameo® products, it is also possible to display the respective menu in order to control the product via cable connection.



SOUND CONTROL
In “sound to light” mode, the fixture is controlled by a built-in microphone capturing sounds to activate colour changes, e.g. the beat of the music.



SINGLE PIXEL CONTROL
This device features Single pixel control. With individual LED pixel on / off status and colour control this fixture is capable of creating animated patterns and video panel style pixel-mapping effects.



SEGMENT PIXEL CONTROL
In comparison to single-pixel control, entire pixel segments can be controlled individually.



ANALOG MODULATION
Analogue modulation is possible.



STROBE LIGHTING
Strobe lights emit a large number of periodic flashes per second seemingly freezing the movement of objects thus creating the illusion of slow motion.



FLICKER-FREE
The high-frequency control of the LEDs while dimming ensures flicker-free operation, including for filming purposes.



DIM TO WARM
The dim-to-warm function can be used to simulate the colour temperature drift of a traditional filament lamp.



EZ CHASE
DMX EZChase is the internal delay function of the DMX control command. This enables a chase to be created with a very small number of DMX channels or even without a DMX controller entirely.



CALIBRATION CHIP
The calibration chip ensures that the mixed colours of the lamp are reproduced identically when using serveral fixtures, thereby preventing any deviations in colour between the lamps.

ICONS LEGEND

GDTF FILE
A GTDF file is available.

BATTERY POWERED
This product is partially to fully battery-operated.

SNAPMAG® TECHNOLOGY
This fixture features SnapMag® technology that enables mounting SnapMag® filter frames in an instant without the need for tools.

PAN & TILT
This moving head fxture features two high-speed high-torque motors for horizontal and vertical rotation (pan and tilt) which are controllable independently.

UNLIMITED ROTATION
This moving head fixture features two high-speed high-torque motors for infinite horizontal and vertical rotation (pan and tilt).

MULTIPLE ANGLES
This fixture provides multiple beam angles and shapes using the included or optional light shaping diffusers.

ZOOM FUNCTION
Enables individual control of one or more zoom levels.

CMY
This luminaire uses a white light source and subtractive CMY (cyan, magenta, yellow) colour mixing for an extremely wide range of hues.

LINEAR CTO
This luminaire features continuously variable CTO (colour temperature orange) correction converting cool white to tungsten and warm white.

COLOUR WHEEL
Equipped with multiple colour filters, rotating the colour wheel enables virtually instant colour changes.

FOCUS
The focus adjusts the beam edge from hard to soft and gobo projection to any distance.

IRIS
The iris is an adjustable circular aperture to continuously vary the beam diameter.

FROST FILTER
Contains an integrated frost filter that ensures soft edges on the light source.

GOBO WHEEL
Gobo wheels hold a selection of fixed or rotating gobos made of metal or glass. Basically, gobos are stencils that allow you to project patterns, shapes and images.

LINEAR PRISM
A linear prism multiplies the beam or gobo projection by the number of facets and arranges the result in a line.

CIRCULAR PRISM
A circular prism multiplies the beam or gobo projection by the number of facets and arranges the result in a circle.

4-SHUTTER FRAMING BLADES
Similar in effect to barn doors but much more flexible, the 4-blade framing shutter system is designed to shape the beam edge. Each blade can be moved and angled independently to full blackout. The entire system can be rotated by 45 degrees in both directions enabling exact positioning.

ANIMATION WHEEL
Providing 3D movement in the light beam, the rotating animation wheel is most effective when used in combination with gobos.

SCAN FAIL SYSTEM
Should the motors guiding the laser beam encounter an error that results in the emission of a static laser beam, the device will immediately shut down laser output.

DUST PROOF
The housing is protected against the entry of dust.

INGRESS PROTECTION RATING OF 44
Classified to IP44 and therefore protected against solid foreign bodies >1 mm and splash water.

INGRESS PROTECTION RATING OF 65
The IP code rates the degree of protection against the intrusion of solid objects, water and access to hazardous parts. This fixture is completely protected against hazardous contact, water jets and ingress of dust.

INGRESS PROTECTION RATING OF 67
Classified to IP67 and therefore impermeable to dust and protected against secondary immersion in water.

IK08
In electrical engineering, the IK impact resistance grade is a measure of the resistance of components to impact and shock loads. For this product, the grade IK08 applies and corresponds to up to 5.0 joules. Equivalent to a 1.7 kg hammer blow.

ETL
This Product is ETL certified.

MODEL REGISTER

MODEL NAME	PAGE
OPUS® X4 PROFILE IP	6
OPUS® H6 IP	8
OPUS® SP6 IP	10
OTOS® LC12	12
OTOS® L16	14
ORON® H2	16
AZOR® SP2 IP	18
OTOS® B5	20
OTOS® H5	22
OTOS® W3	24
OTOS® W6	26
OTOS® W12	28
OPUS® SP 6 FC	32
OPUS® X4 PROFILE	34
OPUS® X PROFILE	36
OPUS® X WASH	38
OPUS® S5	40
OPUS® SP5+	42
OPUS® SP5 FC	44
OPUS® W5	46
OPUS® H5	48
EVOS® W7	50
EVOS® W3	52
AZOR® SP2	54
AZOR® S2	56
AZOR® W2	58
AZOR® B1	60
AZOR® SPOT Z300	62
MOVO® BEAM 200	64
ZENIT® W600 G2	68
SUNO SERIES	70
ZIYA® 200/400	72
ZIYA® 200 COB/400 COB	74
ROOT® PAR IP	76
ZENIT® W300 / W600	78
ZENIT® W600 (D) SMD	80
ZENIT® W300 SMD	82
ZENIT® B200	84
ZENIT® Z180 G2	86
ZENIT® P130 LSD	88
ZENIT® B60 B LSD	90
S2 IP	92
S4 IP	94
PIXBAR® 400 IP G2	96
PIXBAR® 600 G2	98
PIXBAR® SMD G2	100
F2 FC IP	102
F2 T IP	104
F4 FC PO IP	106
F4 T PO IP	108
FLAT PRO (7 / 12 / 18) G2	110
DROP® B1	112
DROP® B4	114
P6	118
ROOT® BAR 6/SMD/BATTERY	120
P2 FC	122
P2 T	124
F1 FC	126
F1 T	128
F2 FC	130
F2 FC+	132
F2 T	134
F2 FC PO	136
F2 T PO	138
F4 FC	140
F4 T	142
LUXIS® FC	144
STUDIO PAR G2	146
ROOT® PAR 4	148
ROOT® PAR 6	150
ROOT® PAR TW	152
ROOT® PAR BATTERY	154
TS 200 FC	156
TS 60 W RGBW	158
X3 TW	160
Q-SPOT® 15 RGBW	162
Q-SPOT® 40 RGBW	164
THUNDER® WASH 100 RGB	166
THUNDER® WASH 600 RGB	168
THUNDER® WASH 600 RGBW	170
THUNDER® WASH 600 UV	172
MATRIX PANELS	174
CL 200 G2	176
INSTANT AIR 3000	180
INSTANT HAZE 1400 G2	182
INSTANT HAZE 1500 T G2	184
INSTANT FOG 1700 PRO	186
LEYA 2000 / 3000	188
D FORCE 5000 RGB	190
WOOKIE 400 RGB	192
PHANTOM F5	194
PHANTOM F3	196
PHANTOM H2	198
STEAM WIZZARD 2000	200
DURA® LINE 50 / 100	204
ZENIT® W300i / W600i	206
DURA® SPOT 60 / 100 / 200 / 400	208
Q-SPOT® 40i	210
H1 FC	214
H1 T	216
H2 FC	218
H2 T	220
G4 FC	222
G4 N	226
G4 T	228
G4 TW	230
UNISENS®	232
CONTROL PADS	234
SB 6 DUAL	236
SB 6 T RDM	238
XNODE 8	240
UNICON®	242
DVC CUE	244
DVC PRO	246
DVC D5	248
iDMX STICK G2	250
iDMX T3	252
iDMX CORE	254



CONNECT AND EMPOWER ALL LUMEN BEINGS AROUND THE WORLD

MKC2025CL

4 069724 187066

@cameo.lighting

@cameoofficial

BLOG blog.adamhall.com

@cameo-light

@cameo_light

The information contained in this publication, including numerical data, has been prepared as a general guide to the products, but intending buyers and users must satisfy themselves as to the suitability and the safety of the products for their particular purposes and duties. No responsibility is assumed for any errors herein. The company reserves the right to alter the designs and material specifications of products shown in this publication without notice.