USER MANUAL

cameo®





ZIYA® 200 COB / 400 COB

IP65 COB LED ZOOM PAR

CLZIYA200COB; CLZIYA400COB;

en-GB

TABLE OF CONTENTS

1 DOCUMENT VERSION AND REVISIONS 6

2 INTRODUCTION 7

2.1 You Made the Right Choice! 7

2.2 Contacts 7

2.3 Link to the Download Centre 7

2.4 Visualisation Conventions in This User Manual 7

3 PRODUCT COMPLIANCE 9

3.1 Manufacturer's Declaration 9

3.2 Declaration of Conformity 9

4 SAFETY INSTRUCTIONS 11

4.1 Intended Use 11

4.2 Explanation of Safety and Warning Symbols 11

4.3 Structure of Warning Messages 12

4.4 General Safety 12

4.5 Electrical Safety 13

4.6 Physical Safety 13

4.7 Photobiological Safety 13

4.8 Thermal Safety 14

4.9 Wireless Safety 14

4.10 Device Safety 14

5 PRODUCT DESCRIPTION 15

5.1 Product Overview 15

5.2 Optional Accessories 15

5.3 Technical Data 16

5.4 User Interface 18

6 GENERAL INFORMATION 19

6.1 About DMX Technology 19

6.1.1 DMX Standard 19

6.1.2 DMX Connection 19

6.1.2.1 Connecting Multiple Fixtures 19

6.1.3 Pin Assignment 19

6.1.4 DMX Terminators 20

6.1.5 DMX Adapters 20

6.2 Explanation of the IP Rating 20
7 PREPARATION 22
7.1 Scope of Delivery 22
8 INSTALLATION 23
8.1 Omega Bracket Mounting Mechanism Overview 23
8.2 Attaching the Omega Bracket 23
8.3 Using the TV Spigot 24
8.4 Mounting the Barndoor 25
8.5 Securing with Safety Cables 27
9 OPERATION 28
9.1 Power Supply 28
9.1.1 Connecting a Mains Power Cable 28
9.1.2 Disconnecting a Mains Power Cable 28
9.2 Device Navigation 29
9.2.1 Using the Control Panel 29
9.2.2 Activating / Deactivating Autolock 29
9.2.3 Using the Battery-powered Display 30
9.3 Device Configuration 30
9.3.1 Setting the DMX Start Address 30
9.3.2 Setting the DMX Mode 30
9.3.3 Setting the Stand-Alone Mode 31
9.3.4 Setting the EZ Remote 31
9.3.4.1 Controlling the device via CAMEO UNICON® 32
9.3.5 Setting the Slave Mode 32
9.3.6 Extended Slave Mode 32
9.3.6.1 Setup for a Running Light Effect 32
9.3.6.2 Setup for a Running Light Effect with Master and First Slave in Sync 33
9.3.7 About Linking Key 33
9.3.8 Pairing a Wireless DMX Receiver with a Transmitter 33
9.3.9 Unlinking a Wireless DMX Receiver from a Transmitter 33
9.4 Main Screen Overview 34
9.5 Submenus 34
9.5.1 About the Submenus 34
9.5.2 Control Menu 35
9.5.2.1 Stand-Alone Submenu Layers 35
9.5.3 Settings Menu 36

9.5.3.1 Wireless Submenu Layers 36
9.5.3.2 Display Submenu Layers 37
9.5.3.3 Dimmer Submenu Layers 38
9.5.3.4 Colour Calibration Submenu Layers 38
9.5.3.5 Silent Zoom Submenu Layers 38
9.5.3.6 Fan Submenu Layers 39
9.5.3.7 Signal Fail Submenu Layers 39
9.5.4 Service Menu 39
9.5.4.1 Service Submenu Layers 39
9.5.5 System Info Menu 40
9.5.5.1 System Info Submenu Layers 40
10 FIRMWARE UPDATE 42
11 MAINTENANCE 43
11.1 Product Maintenance 43
11.2 Storing the Device 43
12 REPAIR 44
13 DISPOSAL 45
13.1 Packaging Disposal 45
13.2 Device Disposal 45
14 DMX CONTROL TABLE 46
INDEX 54

1 DOCUMENT VERSION AND REVISIONS

Version	Date	Implemented changes
v1.0	04/2026	Original version

2 INTRODUCTION

2.1 YOU MADE THE RIGHT CHOICE!

This product has been developed and manufactured to the highest quality standards to ensure many years of problem-free operation. Find further information about Cameo on our website: www.cameolight.com

2.2 CONTACTS

	Adam Hall GmbH Headquarter	Customer Service
E-mail	info@adamhall.com	customerservice@adamhall.com
Phone	+49 6081 9419-0	+49 6081 941973-0
Street	Adam-Hall-Str. 1	Adam-Hall-Str. 1
Postal code / city	61267 Neu-Anspach	61267 Neu-Anspach
Website	*www.adamhall.com*	*www.adamhall.com*

2.3 LINK TO THE DOWNLOAD CENTRE

You can download some information, such as CAD data or technical data, from the Download Centre. Scan the QR code or click the link to download this information:

2.4 VISUALISATION CONVENTIONS IN THIS USER MANUAL

In this manual we use graphical symbols and icons in certain contexts. Find below a table with explanations and use cases of the graphical symbols and icons.

Icon / Symbol	Designation	Context	Explanation / Example
↙	**Prerequisite**	Tasks	Used in task topics to indicate a prerequisite that must be met before beginning the task.
⇨	**Result / Intermediate Result**	Tasks	Used in task topics to indicate a result or intermediate result of an action step.
1 Step **a)** Substep	**1 Action Step** **a) Substep**	Tasks	Used in task topics to indicate action steps and substeps.
1	**Callout**	Graphics; tasks	Text-image reference or labeling of certain functions on the device

Icon / Symbol	Designation	Context	Explanation / Example
[...]	**Value range indicator**	Technical data; paragraphs; lists	Indicates the range of a value, such as "Compressor ratio: **1:1...20:1**". Mostly used in tables or callouts.
*	**Asterisk**	Paragraphs; tables	Indicates additional information in a footnote.
The **LIM** LED lights up	**General User Interface element**	Paragraphs; tasks; tables; lists	The words presented in this way represent graphic user interface elements on the device.
PAGE button	**Key / Button**	Paragraphs; tasks; tables; lists	The words presented in this way represent user interface controls on the device.
`<name>`	**User input**	Paragraphs; tasks; tables; lists	The words presented in this way represent required user inputs.
https://adamhall.com	**Weblink**	Paragraphs; tables; lists	External link to a website

3 PRODUCT COMPLIANCE

3.1 MANUFACTURER'S DECLARATION

Adam Hall offers a voluntary, EU-wide manufacturer's guarantee of 2 years. The statutory warranty period is not affected by this voluntary guarantee.

Visit the Adam Hall Service Portal to access the **Download Centre**:

https://portal.adamhall.com/

Under the **Service & Regulations** section, you find our current detailed manufacturer's declarations, warranty conditions, and limitation of liability.

To request warranty for a product, please contact:

Adam Hall GmbH, Adam-Hall-Str. 1, 61267 Neu-Anspach

customerservice@adamhall.com

0049 (0)6081 / 9419-1000

3.2 DECLARATION OF CONFORMITY

Hereby, Adam Hall Ltd. declares that this product meets the following guidelines (where applicable)

- Electrical Equipment (Safety) Regulations 2016
- Electromagnetic Compatibility Regulations 2016 (SI 2016/1091)
- The Restriction of the Use of Certain Hazardous Substances in Electrical and Electronic Equipment Regulation 2012 (SI 2012/3032)
- Radio Equipment Regulations 2017 (SI 2016/2015)

Products that are subject to Electrical Equipment(Safety)Regulation 2016, EMC Regulation 2016 or RoHS Regulation can be requested at info@adamhall.com. Products that are subject to the Radio Equipments Regulations 2017 (SI2017/1206) can be downloaded at *http://www.adamhall.com/compliance*.

FCC STATEMENT

This device complies with part 15 of the FCC Rules. Operation is subject to the following two conditions:

1. This device may not cause harmful interference.
2. This device must accept any interference received, including interference that may cause undesired operation.

⚠ CAUTION! RF Exposure Information: This equipment complies with FCC radiation exposure limits set forth for an uncontrolled environment. This equipment should be installed and operated with minimum distance 20 cm between the radiator and your body.

⚠ CAUTION! Any changes or modifications to this device not explicitly approved by the manufacturer could void your authority to operate this equipment.

This equipment has been tested and found to comply with the limits for a Class B digital device, pursuant to part 15 of the FCC Rules. These limits are designed to provide reasonable protection against harmful interference in a residential installation. This equipment generates, uses and can radiate radio frequency energy and, if not installed and used in accordance with the instructions, may cause harmful interference to radio communications. However, there is no guarantee that interference will not occur in a particular installation. If this equipment does cause harmful interference to radio or television reception, which can be determined by turning the equipment off and on, the user is encouraged to try to correct the interference by one or more of the following measures:

- Reorient or relocate the receiving antenna.
- Increase the separation between the equipment and receiver.
- Connect the equipment into an outlet on a circuit different from that to which the receiver is connected to.
- Consult the dealer or an experienced radio/TV technician for help.

4 SAFETY INSTRUCTIONS

4.1 INTENDED USE

ZIYA® 200 COB and **ZIYA® 400 COB** are intended for use as motorised lighting devices to generate controllable light output and movement in event and entertainment environments.
This product has been developed for the professional use in the field of event technology, studio, TV, and broadcast.
This product is intended for mobile applications and not for fixed installations.
This product is intended for temporary outdoor use only.
This product is not suitable for domestic use.
Do not use the product outside the operating conditions as stated in the user manual under Technical Data. Liability for damage and third-party damage to persons and property due to inappropriate use is excluded.
This product is not suitable for children and persons with limited physical, sensory, or mental capabilities or lack of experience and knowledge.

4.2 EXPLANATION OF SAFETY AND WARNING SYMBOLS

Find the following safety and warning symbols on the device, the user manual, or the packaging:


This symbol indicates that you must read the complete user manual before using the product.


This symbol indicates a general hazardous situation.


This symbol indicates hazards that can cause electric shock.


This symbol indicates hazards caused by hot surfaces.


This symbol indicates tripping hazards.


This symbol indicates pinching hazards.


This symbol indicates hazards due to overhead loads.



This symbol indicates hazards due to optical radiation


This symbol indicates that looking or staring into the light source must be avoided.

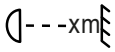

This symbol indicates the minimum distance in meters (m) between the light head and the illuminated surface. Find the corresponding value for this device under Technical Data in the complete user manual and as imprint on the housing of the device.


This symbol indicates that the product is not suitable for household use.

This symbol indicates helpful hints or additional information.

4.3 STRUCTURE OF WARNING MESSAGES

In this user manual, warning messages are structured with a safety symbol, a signal word, a hazard description, and instructions on how to avoid injuries or death.



DANGER

Indicates a hazardous situation which will result in death or serious injury.



WARNING

Indicates a hazardous situation which could result in death or serious injury



CAUTION

Indicates a hazardous situation which could result in minor or moderate injury.



NOTICE

Indicates situations or conditions that could result in damage to property and/or the environment.

4.4 GENERAL SAFETY





- Read this document carefully.
- Keep this document for later reference.
- Follow closely the instructions in this document.
- This document is an integral part of the product. If you sell or pass on the product, you must include this document.
- Only use this product according to its intended use.
- Risk of choking. Keep small parts away from children and individuals with impaired physical, sensory, or mental capabilities.
- Risk of suffocation. Keep plastic bags away from children and individuals with impaired physical, sensory, or mental capabilities.
- Observe all safety instructions and warning messages in this document, on the device, and on the packaging.
- Products are subject to continuous further development. If you find discrepancies between this document and the product labeling, the information on the product always takes priority.
- Do not remove safety instructions or warning messages from the product.
- Do not open the device.
- Do not modify the product.
- If the product shows any sign of damage, do not use it.
- Do not operate the product with removed or missing covers.
- Do not expose the product to direct sunlight.

- If not further specified in the user manual under Technical Data, do not use the product in ambient temperatures that exceed 45 °C / 113 °F or fall below -15 °C / 4 °F
- Do not use the product in tropical climate.
- Do not use the product above 2000 metres of altitude.
- Unless otherwise stated, do not use the product under marine conditions.
- Use only accessories specified by the manufacturer.
- Maintenance and repairs may only be carried out by authorized service personnel.
- Store and transport the product in a dry and safe environment.
- Clean the product on a regular basis. If applicable, see the user manual for maintenance intervals.
- If the device was exposed to strong temperature changes, such as during transport, do not switch it on immediately. Wait until the device has reached ambient temperature.

4.5 ELECTRICAL SAFETY



- This is an electrical device in protection class I. Make sure that the protective conductor is connected to electrical earth. Do not disconnect the protective conductor.
- Do not bypass the mains fuse.
- Use only mains fuses as specified by the manufacturer.
- Do not use kinked or otherwise damaged power cables.
- Only operate the device on compliant, tested and intact mains power outlets.
- Make sure that the voltage and frequency of the mains power match the values specified by the manufacturer.
- Take suitable measures against overvoltage, such as lightning strikes.
- For devices with a power out connector, make sure the total current consumption of all connected devices does not exceed the value specified by the manufacturer.
- This device is not suitable for continuous current.
- Disconnect the device from all poles before maintenance, repair or extend periods of non-use.
- Permanently connected power cables may only be replaced by a qualified service technician.

4.6 PHYSICAL SAFETY



- Make sure that all mounting connections are adequately dimensioned. Observe the relevant regional safety guidelines when mounting the device.



- Make sure that the device and any accessories are securely positioned. Secure against unintentional movement.
- Check all load-bearing screw connections regularly and replace them if necessary.



- Check all cable routes to prevent tripping accidents.
- Moving components, such as mounting brackets, pose a risk of pinching injuries.



4.7 PHOTOBIOLOGICAL SAFETY



- Risk of eye damage. This device is a risk group 2 device. Do not look directly into the light outlet. Do not stare into the light beam. Do not look directly into the lamp with any optical instrument, such as magnifiers or binoculars.



- Risk of seizures. Stroboscopic effects may cause epileptic seizures in susceptible persons.

4.8 THERMAL SAFETY



- Do not install the device near heat sources, such as radiators or ovens.
- Do not block any ventilation openings.
- Unless otherwise stated, keep a minimum clearance of at least 20 centimetres around the device.
- Unless otherwise stated, keep flammable materials, such as paper or wood, at least 50 centimetres away from the device
- Risk of burning. The device housing can become very hot during normal operation. Make sure that the housing cannot be touched accidentally. Allow the device to cool down sufficiently before dismantling, maintenance work, transport, or charging.
- Always adhere to the minimum distance to the illuminated surface, as stated on the device.

4.9 WIRELESS SAFETY



Risk of injury and damage to devices. Do not use W-DMX™ transmissions for safety-relevant applications, such as DMX-controlled motors, DMX-controlled hydraulic systems, or comparable moving components. Do not use W-DMX™ transmissions for pyrotechnic devices, gas effects, or liquid effects. This includes CO2 cannons, confetti shooters, and similar effects.

Radio transmitter operation is subject to official regulations. Make sure you adhere to regional guidelines before commissioning.

Radio operation can lead to potentially dangerous effects. Do not use this device in sensitive areas such as:

- Hospitals, health centres or other healthcare facilities that provide patient treatment with skilled personnel and equipment
- Explosive atmospheres, including:
  - ATEX zones (Zone 0, 1, 2, 20, 21, 22) (EU)
  - Hazardous Locations Class I, II and III (US/Canada)
- Restricted areas
- Military facilities
- Areas where the use of mobile phones is prohibited, such as aircrafts.



Quality and performance of wireless signal transmissions is dependent on the environmental conditions. All range specifications refer to free-field application with visual contact without interference. Range and signal stability may be influenced by:

- Shielding, such as masonry, metal buildings, or water
- Interference
- High radio traffic, such as strong W-LAN networks
- Electromagnetic radiation, such as LED video walls or dimmers

4.10 DEVICE SAFETY



- Do not switch the device on and off in quick succession, because this will shorten the device lifetime.
- Do not expose the device to direct sunlight, laser radiation, and bundled light beams from other spotlights to prevent damage to the housing and internal components.

5 PRODUCT DESCRIPTION

5.1 PRODUCT OVERVIEW

FEATURES:

- RGBALC COB LED
- Zoom range: 13° … 35°
- CCT: 2,400 K … 10,000 K
- Motorised, silent zoom with vibration-free operation
- 15 colour presets
- Various fan modes
- Fresnel lens for homogeneous light distribution without hotspots
- IP65 housing for outdoor and touring applications
- Patented **SPIN16®** technology with integrated 16 mm TV spigot
- Robust design and flexible installation options

ZIYA® 200 COB:

- CRI: 97 (3,200 K) / 96 (5,600 K)
- Light output: 5,600 lm

ZIYA® 400 COB:

- CRI: 92 (3,200 K) / 97 (5,600 K)
- Light output: 9,800 lm

5.2 OPTIONAL ACCESSORIES

Find various accessories for your product in the Adam Hall Shop:
https://www.adamhall.com/shop

Accessory	Article Number
OMEGA BRACKET 3 Omega Bracket with Bracing Slot	CLOMEGABRACKET3 Further information and ordering options are available here: *OMEGA BRACKET 3*
ZIYA® 200 BARNDOOR Barndoor including filter frame for **ZIYA® 200** and **ZIYA® 200 COB**	CLZIYA200BARNDOOR Further information and ordering options are available here: *Product link will be available soon*
ZIYA® 400 BARNDOOR Barndoor including filter frame for **ZIYA® 400** and **ZIYA® 400 COB**	CLZIYA400BARNDOOR Further information and ordering options are available here: *Product link will be available soon*

5.3 TECHNICAL DATA

PHOTOMETRIC VALUES

Parameter	ZIYA® 200 COB	ZIYA® 400 COB
Illuminant type	COB LED	COB LED
Illuminant power	200 W	400 W
Luminous flux	5600 lm	9800 lm
Front lens diameter	139 mm	166 mm
Field angle	21.9° … 48.8°	22.4° … 53.7°
Beam angle	13° … 35°	13.6° … 38.5°
Focusing type	manual	manual
LED PWM frequency	650Hz, 1530Hz, 3600Hz, 12kHz, 18.9kHz, 25kHz	650Hz, 1530Hz, 3600Hz, 12kHz, 18.9kHz, 25kHz
Dimmer resolution	16 Bit	16 Bit
Dimmer curves	Linear, Exponential, Logarithmic, S curve	Linear, Exponential, Logarithmic, S curve

COLOURS

Parameter	ZIYA® 200 COB	ZIYA® 400 COB
Colour mix functions	Direct LED, CCT, Tint, Colour Pre-sets, HSI, X/Y	Direct LED, CCT, Tint, Colour Pre-sets, HSI, X/Y
LED colours	Red, Green, Blue, Amber, Lime, Cyan	Red, Blue, Green, Amber, Lime, Cyan
Correlated colour temperature (CCT)	2400 K ... 10000 K	2400 K ... 10000 K
Halogen simulation redshift/DTW	Yes	Yes
Calibration	Yes	Yes
Colour rendering index (CRI)	97 at 3200 K / 96 at 5600 K	92 at 3200 K / 97 at 5600 K

MOVEMENT

Parameter	ZIYA® 200 COB	ZIYA® 400 COB
Tilt	360° (by hand)	360° (by hand)

EFFECTS

Parameter	ZIYA® 200 COB	ZIYA® 400 COB
Strobe	0 Hz … 20 Hz	0 Hz … 20 Hz

CONTROL

Parameter	ZIYA® 200 COB	ZIYA® 400 COB
Controller protocols	DMX, RDM, WDMX by TimoFX	DMX, RDM, WDMX by TimoFX
Number of DMX control modes	11	11

Parameter	ZIYA® 200 COB	ZIYA® 400 COB
Stand-alone operating modes	Master/Slave, Zoom, Direct LED, CCT, Color Presets, HSI, Color Coordinates, Loop	Master/Slave, Zoom, Direct LED, CCT, Color Presets, HSI, Color Coordinates, Loop
Data in connector	XLR 5-pole male, Ethernet	XLR 5-pole male, Ethernet
Data out connector	XLR 5-polefemale, Ethernet	XLR 5-pole female, Ethernet

MAINS OPERATION

Parameter	ZIYA® 200 COB	ZIYA® 400 COB
Operation voltage	100 V AC … 240V AC / 50 Hz … 60 Hz	100 V AC … 240V AC / 50 Hz … 60 Hz
Rated power	200 W	360 W
Min. Cos Phi power factor (230 V)	0.99	0.99
Rated current	1.8 A at 100 V / 0.9 A at 230 V	3.8 A at 100 V / 1.6 A at 230 V
Mains connector	Seetronic TR1	Seetronic TR1
Power out connector	Seetronic TR1	Seetronic TR1
Mains fuse	6.3 A	6.3 A
Fuse replacement	Inside access	Inside access
Max. output current	9 A	7 A

HOUSING

Parameter	ZIYA® 200 COB	ZIYA® 400 COB
Cabinet material	Die-cast aluminium	Die-cast aluminium
Colour	Black	Black

COOLING

Parameter	ZIYA® 200 COB	ZIYA® 400 COB
Cooling system	Temperature-controlled fan cooling	Temperature-controlled fan cooling
Cooling modes	Off, Auto, Constant Low, Constant Mid, Constant High	Off, Auto, Constant Low, Constant Mid, Constant High

ENVIRONMENTAL

Parameter	ZIYA® 200 COB	ZIYA® 400 COB
Protection class	IP65	IP65
Risk group	2	2
Ambient temperature	-15 °C ... 45 °C	-15 °C ... 45 °C
Maximum air humidity (non-condensing)	< 85 %	< 85 %

DIMENSIONS & WEIGHT

Parameter	ZIYA® 200 COB	ZIYA® 400 COB
Width	213 mm	245 mm
Height	202 mm	231 mm
Depth	312 mm	329 mm
Weight	7.0 kg	8.7 kg
Product dimensions	315 mm x 315 mm x 500 mm	355 mm x 355 mm x 530 mm

5.4 USER INTERFACE

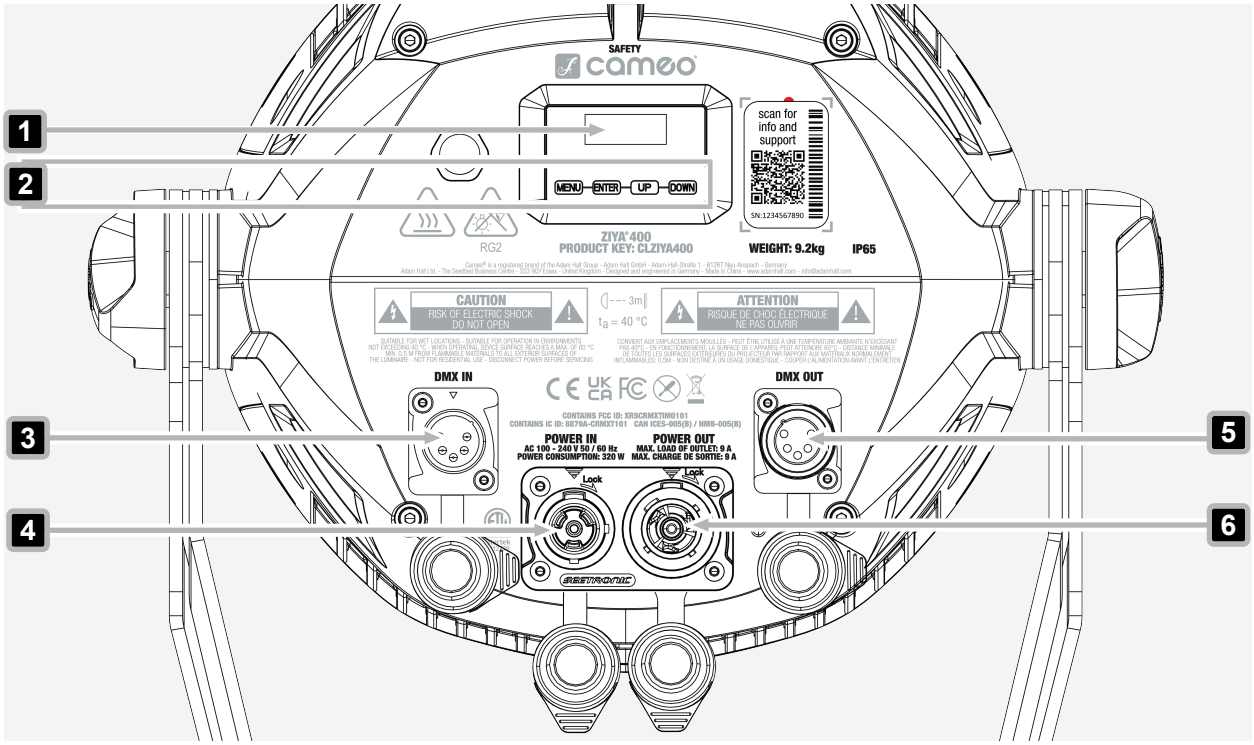

1 **LC - Display** - Main graphic display

2 **Touch-sensitive controls** - Opens the menu structure and navigates the device

3 **DMX IN** - Male IP65 5-pin XLR socket for connection of an DMX control device. When not in use, seal with rubber sealing cap.

4 **POWER IN** - IP65 mains power socket. When not in use, seal with rubber sealing cap.

5 **DMX OUT** - Female IP65 5-pin XLR socket for relay of DMX control signal. When not in use, seal with rubber sealing cap.

6 **POWER OUT** - IP65 mains power output socket. Enables power supply to other **CAMEO** devices. Make sure that the total current consumption of all connected devices does not exceed the value specified on the device. When not in use, seal with rubber sealing cap.

6 GENERAL INFORMATION

6.1 ABOUT DMX TECHNOLOGY

6.1.1 DMX STANDARD

DMX (Digital Multiplex) is a universal transmission protocol for sending a serial data stream from controllers to fixtures. DMX is the common 'language' used to control a large number of fixture types and models from different manufacturers. Fixtures can be connected with one another and controlled via a central controller.

6.1.2 DMX CONNECTION

The DMX data stream is forwarded from one connected fixture to the next via the DMX input and DMX output connectors (3-pin XLR or 5-pin XLR). The maximum number of fixtures in the chain must not exceed 32 units. The last fixture in the chain must be equipped with a terminating resistor (terminator).
For optimum data transmission, it is necessary to keep the connecting cables between the individual fixtures as short as possible. The order in which the devices are integrated in the DMX network has no influence on the addresses.

6.1.2.1 CONNECTING MULTIPLE FIXTURES

1. Connect the male XLR connector (3-pin or 5-pin) of the DMX cable to the DMX output (female XLR socket) of the DMX controller.
2. Connect the female XLR connector (3-pin or 5-pin) of the DMX cable to the DMX input (male XLR socket) of the first fixture.
3. Daisy chain all other fixtures in the same way by connecting the DMX output (female XLR socket) to the DMX input (male XLR socket) of the next fixture.

> The maximum number of fixtures in the chain must not exceed 32 units.

6.1.3 PIN ASSIGNMENT

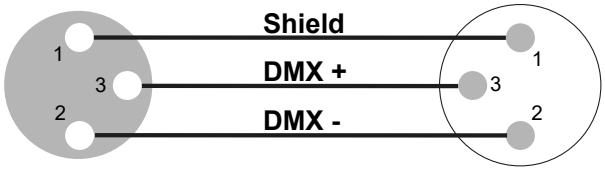

DMX cable with 3-pin XLR connectors

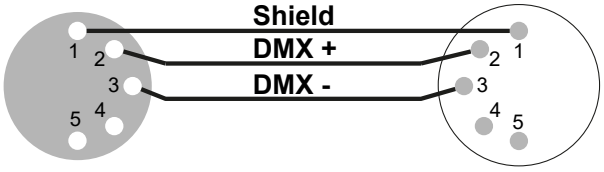

DMX cable with 5-pin XLR connectors (pin 4 and 5 are not used)

6.1.4 DMX TERMINATORS

The last fixture in a DMX chain needs to be equipped with a terminating resistor (120 Ω, 0,25 W) to prevent system errors.

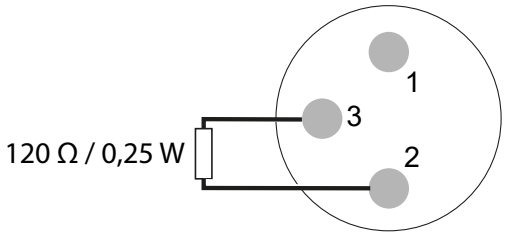

DMX Terminator 3-pin

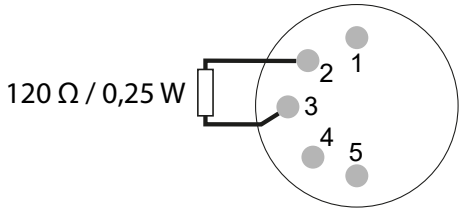

DMX Terminator 5-pin

6.1.5 DMX ADAPTERS

The combination of DMX fixtures with 3-pin connections and DMX fixtures with 5-pin connections in a DMX chain is possible with suitable adapters.

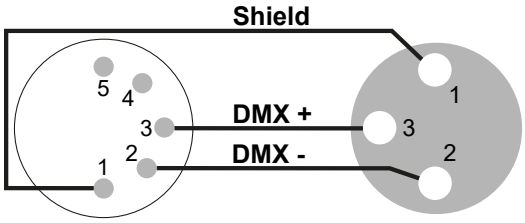

DMX Adapter 5-pin XLR male to 3-pin XLR female

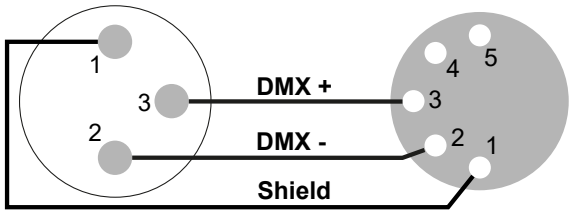

DMX Adapter 3-pin XLR male to 5-pin XLR female

6.2 EXPLANATION OF THE IP RATING

The IP rating or ingress protection code indicates how well a device is protected against water, dust, solid foreign objects, and contact with hazardous parts.

IP Rating does not describe general bad weather resistance.

The first identification digit indicates the level of protection against the ingress from dust, solid foreign bodies and contact with hazardous parts:

IP2X	Protection against solid foreign bodies ≥ 12.5 mm in diameter
IP3X	Protection against solid foreign bodies ≥ 2.5 mm in diameter
IP4X	Protection against solid foreign bodies ≥ 1.0 mm in diameter
IP5X	Protection against dust in harmful quantities and completely protected against contact.
IP6X	Dust-tight and completely protected against contact from solid foreign bodies

Table 1: IP Rating - First identification digit

The second identification digit indicates the level of protection against the ingress from water:

IPX0	No protection
IPX1	Protection against dripping water
IPX2	Protection against dripping water when the device is tilted up to 15°
IPX3	Protection against falling spray water up to 60° from the vertical
IPX4	Protection against splashing water on all sides
IPX5	Protection against water jets (nozzle) from any angle
IPX6	Protection against strong water jets
IPX7	Protection against temporary immersion and ingress of water in harmful quantity

Table 2: IP Rating - Second identification digit

7 PREPARATION

7.1 SCOPE OF DELIVERY

Item Description	Quantity
Device	1
Mains power cable	1
Safety Compliance Information	1

8 INSTALLATION

8.1 OMEGA BRACKET MOUNTING MECHANISM OVERVIEW



1 **Mounting bolt lever**

2 **Mounting bolt**

3 **Protrusion**

8.2 ATTACHING THE OMEGA BRACKET

WARNING

Falling object

Risk of serious injury

a. Observe all regional safety regulations concerning overhead loads.
b. Make sure that the device is securely mounted.
c. Make sure that the mounting accessory supports the weight of the device.
d. Before any assembly, check that all mounting bracket components are complete, undamaged and work correctly.

CAUTION

Pinching Hazard

Risk of Injury

a. Be cautious while attaching the brackets. Handle with care to avoid injury.

✓ The device is powered off.

1 Place the device on its side.

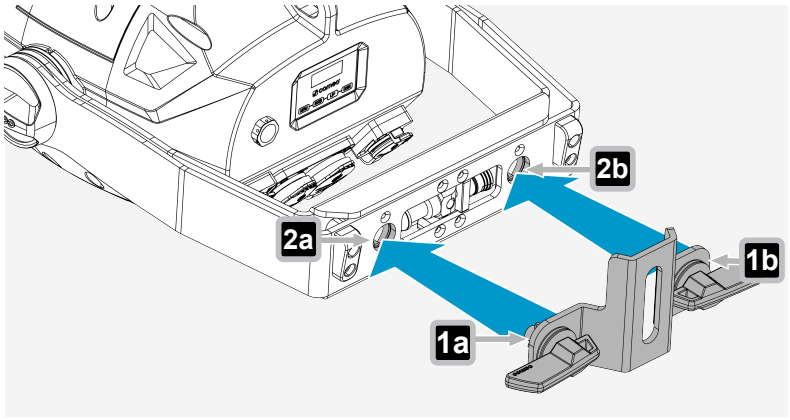

2 Align the mounting bolts **1** of the omega bracket with 2 mounting points **2** on bottom of the device.

ⓘ Make sure that the protrusions on the bolts **1** fit into the recesses of the mounting points **2**.

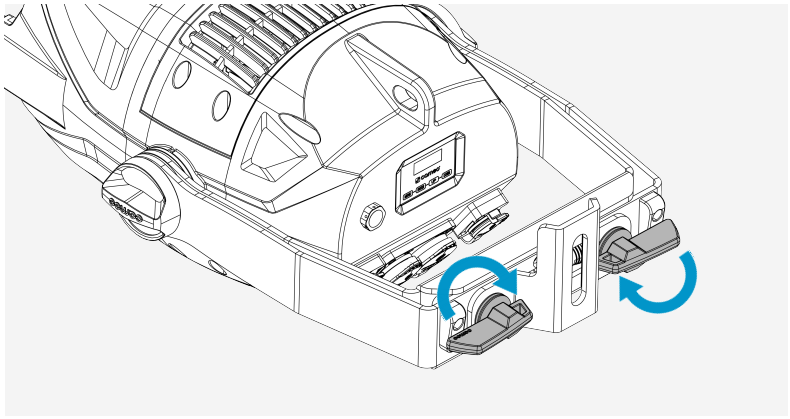

3 Turn the mounting bolt lever clockwise until it is tight.

ⓘ Suitable truss clamps are sold separately.

8.3 USING THE TV SPIGOT

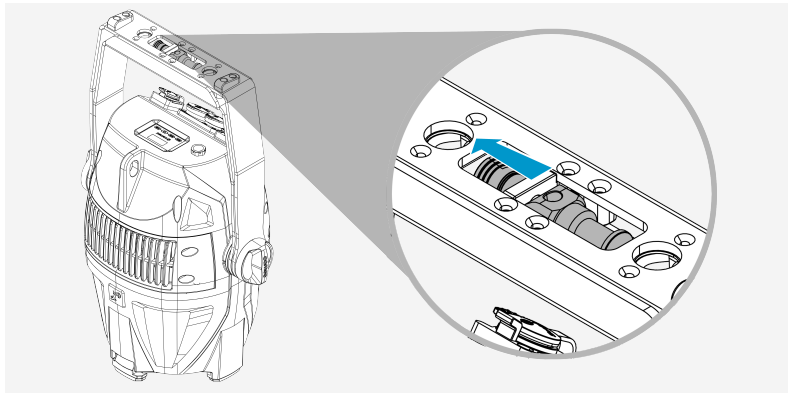

1 Release the locking mechanism to unlock the TV spigot from the stowed position.

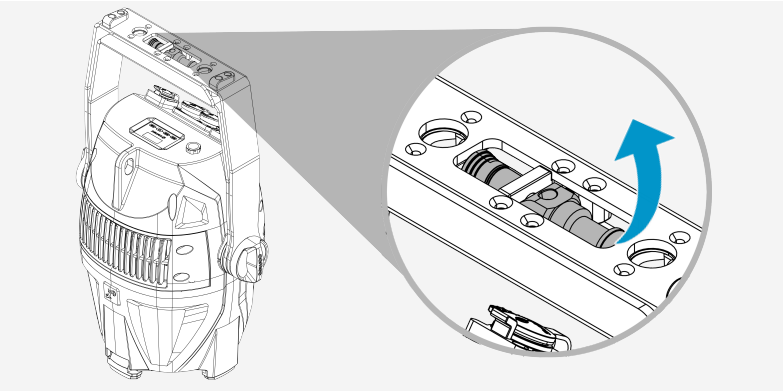

2 Rotate the spigot 90° into the operating position.

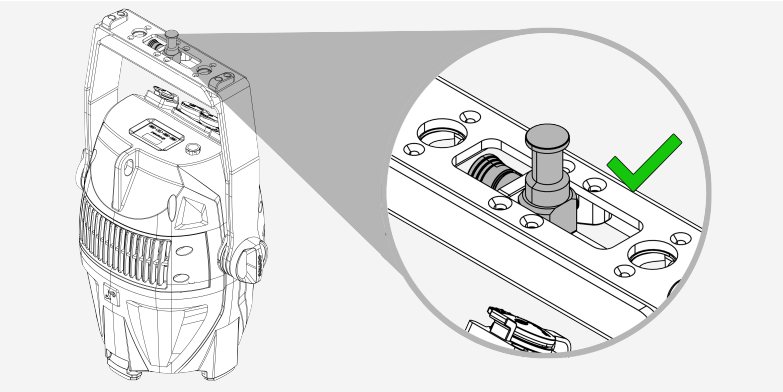

⇨ The locking mechanism engages and secures the TV spigot in the operating position.

8.4 MOUNTING THE BARNDOOR

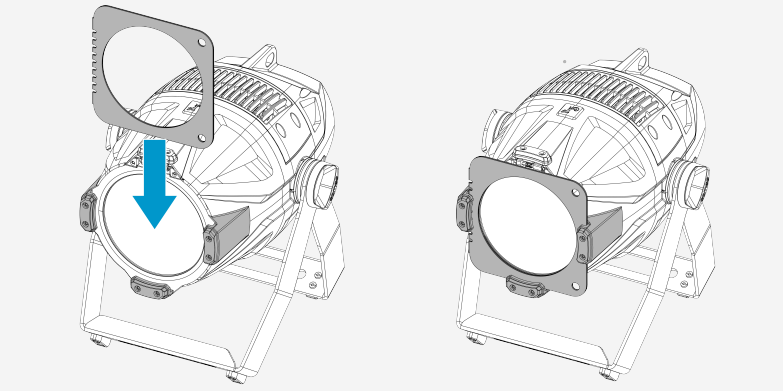

1 Slide the filter frame into the designated guide slots at the light outlet.

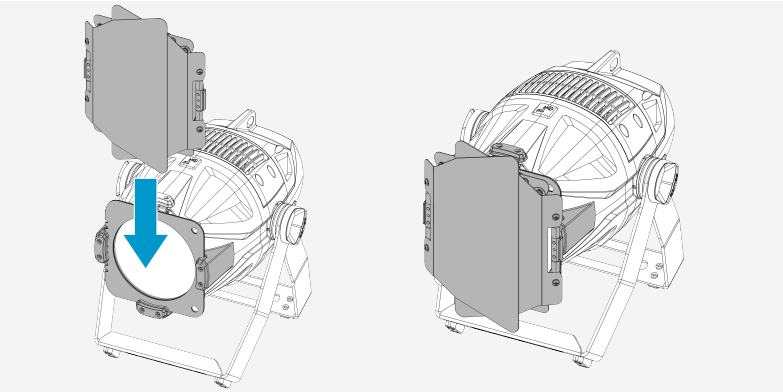

2 Slide the barndoor into the same guide slots used for the filter frame.

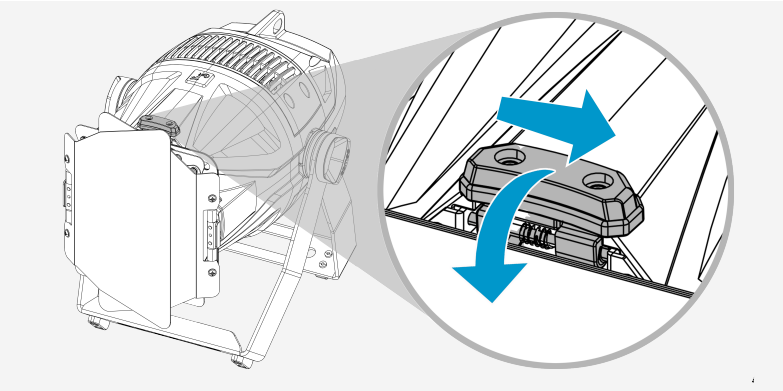

3 Slide the upper guide slot to the right to release the locking mechanism.

4 Fold the upper guide slot forward.

⇨ Filter frame and barndoor are securely locked in place.

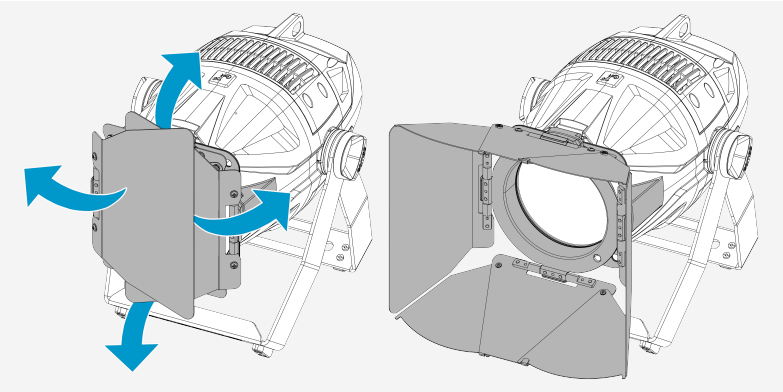

5 Adjust the barndoor leaves to the desired position.

8.5 SECURING WITH SAFETY CABLES

WARNING

Falling object

Risk of serious injury

a. Observe all regional safety regulations concerning overhead loads.
b. Make sure that the device is securely mounted.
c. Secure the luminaire 1 and each additional component that may fall independently, such as the filter frame 2 and the barndoor 3, with separate safety cables.
d. Make sure that all safety cables and mounting accessories are rated for the respective load.

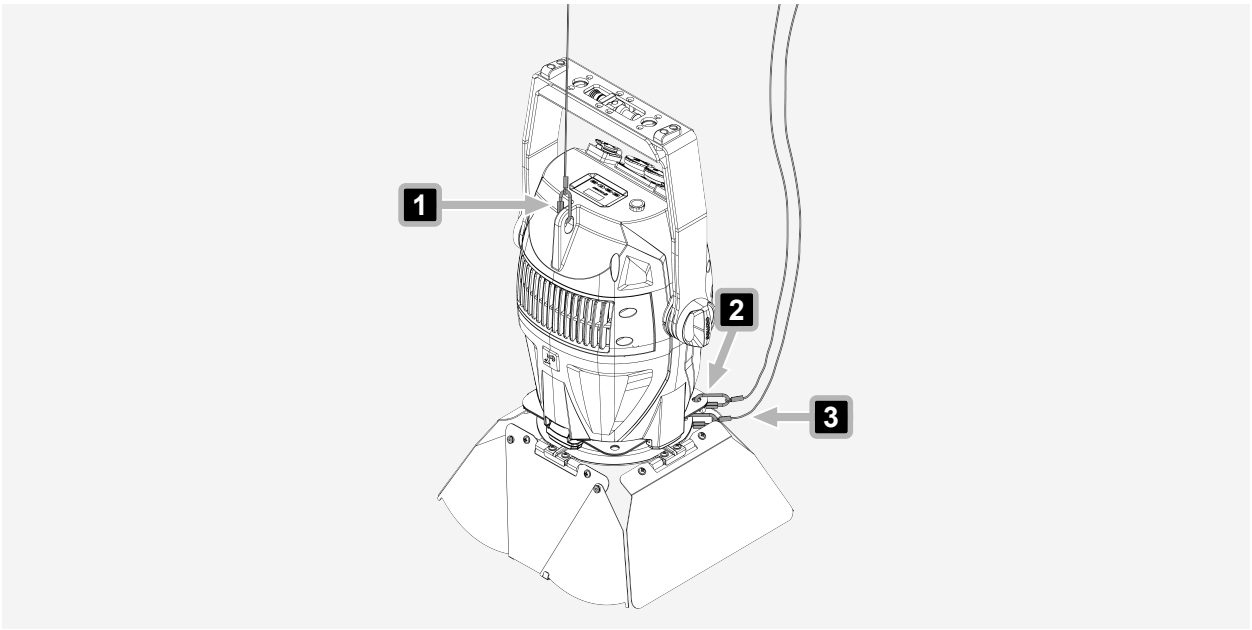

If the luminaire is operated without filter frame and barndoor, one safety cable for the luminaire is sufficient.

9 OPERATION

9.1 POWER SUPPLY

9.1.1 CONNECTING A MAINS POWER CABLE

WARNING

Mains voltage

Risk of electric shock

a. Do not use kinked or damaged mains power cables.

NOTICE

Damage to the Device

a. Make sure that the voltage of the mains power socket matches the device operating voltage.

b. Use only supplied power cables or original Neutrik powerCON® TRUE1 cables. Otherwise you must not plug or unplug the device under load.

1 Plug the device power connector into the device. Make sure the bayonet connector is positioned correctly.

2 Turn the bayonet connector clockwise to lock it.

3 Plug the mains power connector into the mains power socket.

9.1.2 DISCONNECTING A MAINS POWER CABLE

NOTICE

Damage to the Device

a. Make sure that the voltage of the mains power socket matches the device operating voltage.

b. Use only supplied power cables or original Neutrik powerCON® TRUE1 cables. Otherwise you must not plug or unplug the device under load.

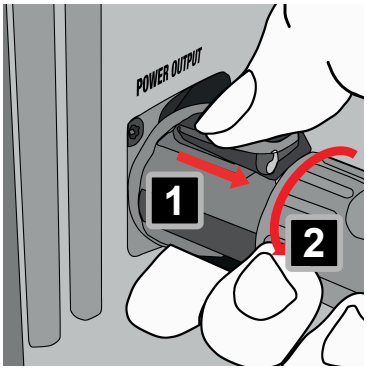

1 Disconnect the mains power connector of the mains power cable from the mains power socket.

2 Pull the locking lever of the bayonet connector backwards and hold it. 1

3 Turn the bayonet connector anticlockwise. 2

4 Pull the bayonet connector out of the socket.

9.2 DEVICE NAVIGATION

9.2.1 USING THE CONTROL PANEL

NOTICE

Control panel dirty or damp

Functionality impaired

a. Make sure that the control panel is dry and clean.

b. After configuring the device, activate the **Autolock** function in the settings.

OPERATION WITH ACTIVATED AUTOLOCK FUNCTION

Tap and hold **UP** and **DOWN** simultaneously for approximately 5 seconds to operate the device.

1 Tap **MENU** to access the main menu.

2 Tap **UP** or **DOWN** to navigate through the menu items.

3 Tap **ENTER** to access a submenu or to change the value of a menu item.

4 Tap **UP** or **DOWN** to change the value of a menu item.

5 Tap **MENU** to return to the next higher menu layer or the main display.

The selected menu item appears as the header of the new view, as shown in this example.

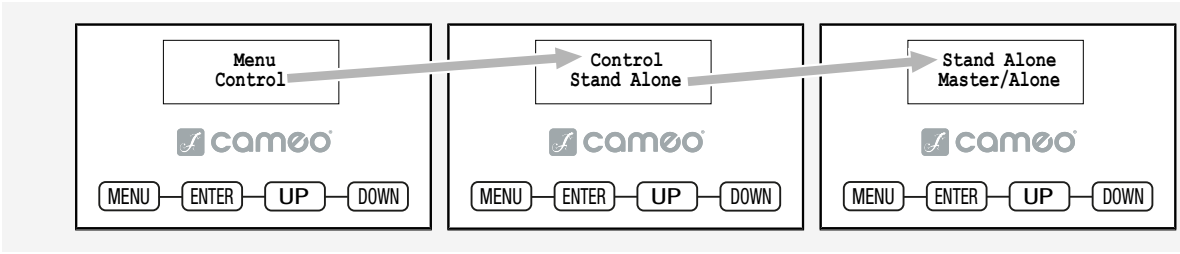

9.2.2 ACTIVATING / DEACTIVATING AUTOLOCK

The **Autolock** function prevents malfunctions caused by moisture or dirt on the control panel. Find below instructions for activating the **Autolock** function.

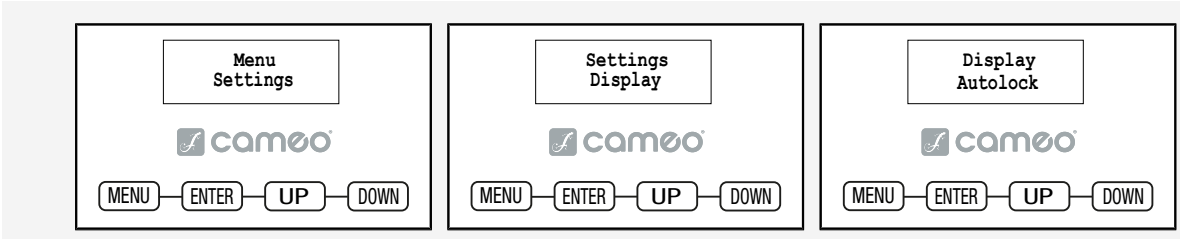

1 In the main menu, choose **Settings**>**Display**>**Autolock**.

2 Use the control panel to adjust the settings.

a) Choose **On after 60s** to automatically lock the controls if there is no input for 60 seconds.

b) Choose **Off** to deactivate the **Autolock** function.

3 Tap **ENTER** to confirm.

9.2.3 USING THE BATTERY-POWERED DISPLAY

The device has a battery-powered display. The battery-powered display allows to access and change settings without a power supply.

> When using the battery-powered display, all external device controls are deactivated. The main display indicates that there is no control signal.

1 Tap and hold **MENU** for approximately 10 seconds.
   ⇨ The display turns on.
2 Make the required settings.

9.3 DEVICE CONFIGURATION

9.3.1 SETTING THE DMX START ADDRESS

⚠ **WARNING!** Risk of eye damage. As soon as the DMX start address is entered, the device may immediately activate if a DMX signal is present and may cause glare.

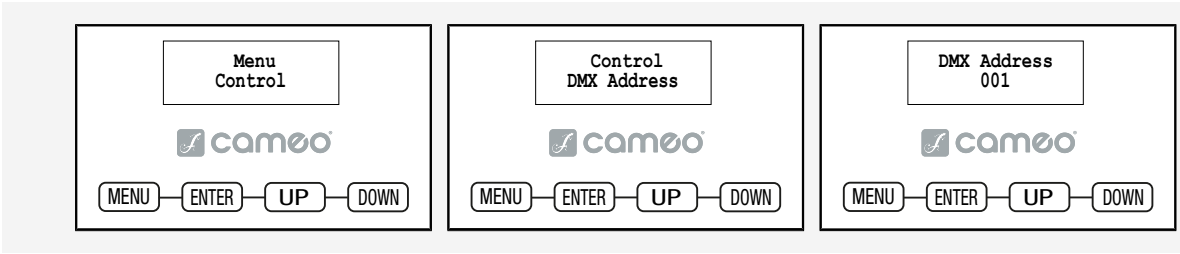

1 In the main menu, choose **Control**>**DMX Address**.
2 Use the control panel to adjust the desired DMX start address.
3 Tap **ENTER** to confirm.

9.3.2 SETTING THE DMX MODE

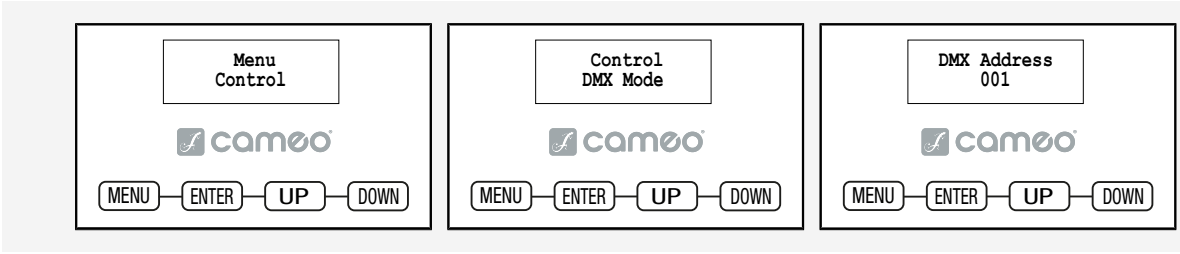

1 In the main menu, choose **Control**>**DMX Mode**.
2 Use the control panel to adjust the settings.
3 Tap **ENTER** to confirm.

> Find DMX tables with the channel assignments in the DMX CONTROL section of this user manual.

9.3.3 SETTING THE STAND-ALONE MODE

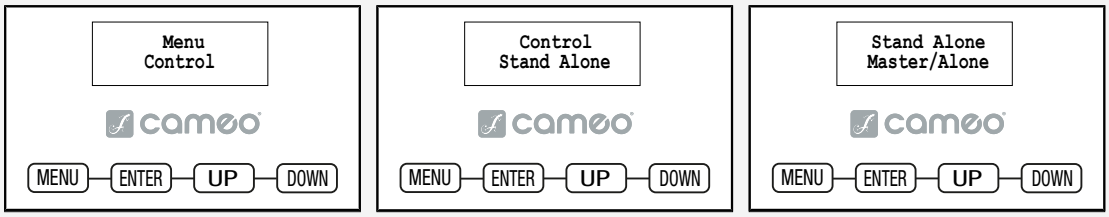

1 In the main menu, choose **Control**>**Stand Alone**.
2 Use the control panel to adjust the settings.
   a) Choose **Master/Alone**>**Master** to output the control signal to slave fixtures via XLR.
   b) Choose **Master/Alone**>**Alone** to deactivate the control signal output.
   c) Choose **Zoom** to adjust the zoom.
   d) Choose **Direct LED** to create a custom scene without an additional DMX controller.
   e) Choose **CCT** to adjust the colour temperature, tint, brightness, and frost filter.
   f) Choose **Color Preset** to select a colour preset.
   g) Choose **HSI** to adjust the hue, saturation, intensity, and frost filter.
   h) Choose **Color Coordinates**>**By User** to adjust the brightness and set the colour via the x coordinate and y coordinate.
   i) Choose **Color Coordinates**>**By UNISENS** to control the colour with a connected **UNISENS®** and set the brightness.
   j) Choose **Play Loop** to activate one of the eight available loops (Loop 1–8).
   k) Choose **Edit User Color** to customise the colour presets.
   l) Choose **Edit Loop** to customise a pre-programmed loop.
   m) Choose **Timer** to activate and set a timer.
3 Tap **ENTER** to confirm.

9.3.4 SETTING THE EZ REMOTE

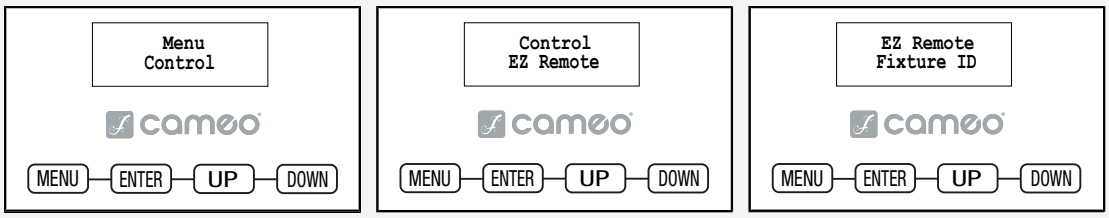

1 In the main menu, choose **Control**>**EZ Remote**.
2 Use the control panel to set the **Fixture ID**.
3 Tap **ENTER** to confirm.

9.3.4.1 CONTROLLING THE DEVICE VIA CAMEO UNICON®

✓ You have set a **Fixture ID** on the device.

1 Connect the device and the **UNICON®** with a DMX cable.
2 In the **UNICON®**'s menu, choose **DMX Control**>**EZ Remote**.
3 Set the same ID as on the device.
⇨ With the **UNICON®**, you can control up to 8 devices or device groups with different unit IDs via RGB, GEL, CCT, or HSI.

9.3.5 SETTING THE SLAVE MODE

✓ You have activated the control signal output in the master unit by navigating to: **Control**>**Stand Alone**>**Master/Alone**>**Master**.

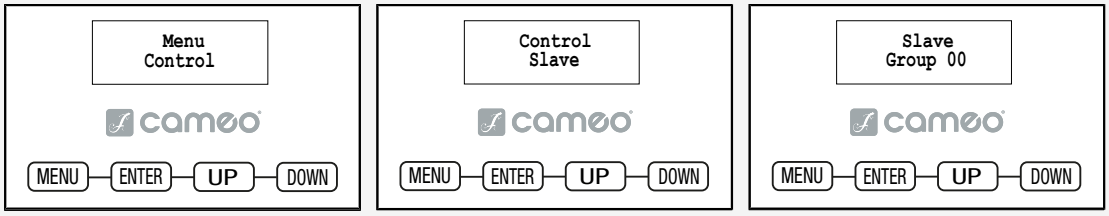

1 In the main menu, choose **Control**>**Slave**.
2 Tap **ENTER** to confirm.

9.3.6 EXTENDED SLAVE MODE

9.3.6.1 SETUP FOR A RUNNING LIGHT EFFECT



9.3.6.2 SETUP FOR A RUNNING LIGHT EFFECT WITH MASTER AND FIRST SLAVE IN SYNC



9.3.7 ABOUT LINKING KEY

A **Linking Key** is an eight-digit numerical code used to pair wireless DMX transmitters and receivers in lighting fixtures. The key always consists of exactly eight characters, and all eight positions must be filled. Each position can contain any digit from 0 to 9.

9.3.8 PAIRING A WIRELESS DMX RECEIVER WITH A TRANSMITTER

✓ The transmitter and the receiver are located within the same wireless operating range.

1 In the receiver's menu, select **Settings**>**Wireless**>**Operation mode**>**Receive**.
2 In the receiver's menu, select **Settings**>**Wireless**>**Linking**>**Receive Reset**.
⇨ The receiver is now ready to pair and waiting for a pairing request.
3 In the transmitter's menu, select **Settings**>**Wireless**>**Operation mode**>**Transmit CRMX/G4/G3**.
4 In the transmitter`s menu select **Settings**>**Wireless**>**Linking**>**Link**.
⇨ The receiver and transmitter will pair automatically.
⇨ The wireless DMX link between fixtures remains active until it is manually disconnected.

ⓘ Repeat steps 1 and 2 for each receiver you want to connect to a single transmitter.

9.3.9 UNLINKING A WIRELESS DMX RECEIVER FROM A TRANSMITTER

There are two ways to disconnect the wireless DMX link:

UNLINK FROM THE RECEIVER

1 On the device configured as the receiver, select **Reset** to remove the existing pairing.
⇨ The receiver is now unlinked and ready for a new pairing if needed.

UNLINK FROM THE TRANSMITTER

2 On the device configured as the transmitter, select **Unlink** to disconnect all paired receivers from the transmitter.

ⓘ After performing either option, the wireless DMX connection is fully disconnected. The devices will not reconnect automatically unless paired again.

9.4 MAIN SCREEN OVERVIEW

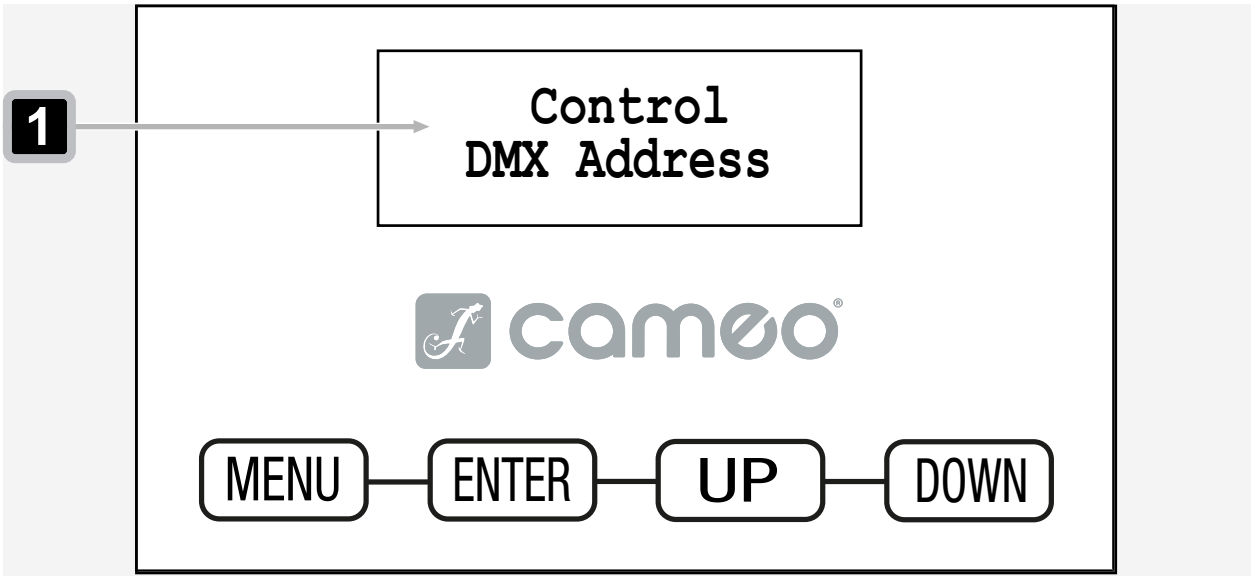

1 Indicates the current position within the menu structure.

9.5 SUBMENUS

9.5.1 ABOUT THE SUBMENUS

Find detailed explanations of all submenu layers in the submenu visual guide. Each section begins with a graphic showing its exact position within the menu structure, followed by tables listing the available submenu items.

- *Functional descriptions of the menu items are shown in italics* **1** .
  (This applies to the final selectable menu item in each layer.)
- Factory settings are highlighted in **bold** **2** .

Example:

Layer 3	Layer 4	Function Description
State	On	*Activates the wireless module* **1**
	Off **2**	*Deactivates the wireless module* **1**

9.5.2 CONTROL MENU

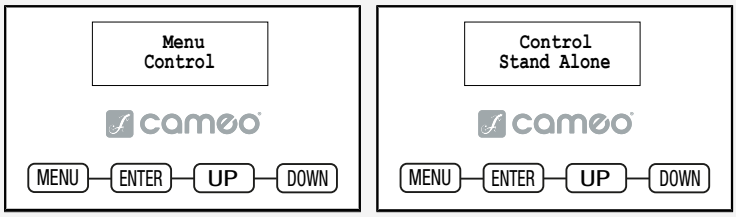

9.5.2.1 STAND-ALONE SUBMENU LAYERS

Layer 3	Layer 4	Layer 5 / Layer 6 / *Function Description*	
Master/Alone	Master	*Relays the control signal via* DMX OUT	
	Alone	*Does not relay the control signal*	
Zoom		*Sets the zoom*	
Direct LED	Dimmer	*Sets the brightness*	
	Red Green Blue …	*Sets the colour. The number and type of colours are defined by the fixture's colour mixing.*	
CCT	Dimmer	*Sets the brightness*	
	CCT	*Sets the colour temperature*	
	Tint	*Sets the tint*	
Color Preset	Dimmer	*Sets one of the three pre-programmed colour presets. The brightness (*Dimmer*) is set at a higher level.*	
	Preset		
	GEL		
	User Color		
HSI	Dimmer	*Sets the brightness*	
	Hue	*Sets the tint*	
	Saturation	*Sets the saturation*	
Color Coordinates	By User	Dimmer	*Sets the brightness*
		x Coordinate	*Sets the colour via x coordinate*
		y Coordinate	*Sets the colour via y coordinate*
	By UNISENS	Dimmer	*Sets the brightness. The colour coordinates are controlled via* **UNISENS®**.
Play Loop		*Selects and activates the desired loop*	
Edit User Color	User Color 1 … User Color 8	Set via Direct	*Sets the user colour presets according to the instructions for the respective mode*
		Set via CCT	
		Set via Preset	
		Set via HSI	

Layer 3	Layer 4	Layer 5 / Layer 6 / *Function Description*	
		Set via Coordinates	
Edit Loop	Loop 1 … Loop X	Step	*Selects step 1 … 8*
		t-Step	*Sets the step time*
		t-Fade	*Sets the fade time*
		Zoom	*Sets the zoom*
		User Color	*Selects user colour 1 … 8, blackout, or skip step from step 3 onwards*
Timer	Timer	On	*Activates or deactivates the timer*
		Off	
	Fade In	*Sets the fade-in time*	
	Dwell Time	*Sets the dwell time*	
	Fade Out	*Sets the fade-out time*	

9.5.3 SETTINGS MENU

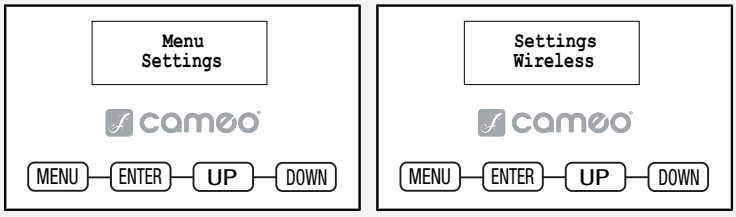

9.5.3.1 WIRELESS SUBMENU LAYERS

Layer 3	Layer 4	Layer 5 / *Function Description*
State	On	*Activates the wireless module*
	Off	*Deactivates the wireless module*
Operation mode	**Receive**	*Wireless module = receiver*
	Transmit CRMX	*Wireless module = transmitter with* CRMX *transmitter standard*
	Transmit G4s	*Wireless module = transmitter with* G4s *transmitter standard*
	Transmit G3	*Wireless module = transmitter with* G3 *transmitter standard*
Linking	Mode Receive: Receive Reset	*Resets the receiver and puts it in pairing standby mode*
	Mode Transmit: Link	*Pairs with compatible, ready-to-pair wireless devices*
	Mode Transmit: Unlink	*Disconnects wireless* DMX *connections and places in pairing standby mode*

Layer 3	Layer 4	Layer 5 / *Function Description*	
Linking Key	Linking Key	*Sets the connection key*	
	CRMX Mode (only available with operation mode = Receive)	**CRMX**	*Receiver standard* = CRMX
		CRMX2	*Receiver standard* = CRMX2
	CRMX Universe (only available with operation mode = Receive)	**A** … H	*Selects* CRMX *universe A to H*
Universe Metadata	RGB Color Code	Red Orange Yellow Green Cyan Blue Purple White	RGB *code for colour display of the universe*
	Universe Name	*A 16-character string with a customisable name that identifies the universe*	
Signal Routing	**Send to XLR**	*Sends incoming signal to* XLR *connector*	
	Backup by XLR	*Uses incoming signal from* XLR *connector if wireless signal is lost*	
	Receive only	*No connection between wireless signal and* XLR *connectors*	

9.5.3.2 DISPLAY SUBMENU LAYERS

Layer 3	Layer 4	*Function Description*
Reverse	On	*180° display rotation (for example, for overhead installation)*
	Off	*No display rotation*
Off Timer	Always On	*Permanently on*
	Off after 20s	*Deactivates after approximately 20 seconds of inactivity*
Autolock	On after 60s	*Controls locked after approximately 60 seconds without input (*LOCKED*). Unlock: Tap* UP *and* DOWN *simultaneously for approximately 5 seconds.*
	Off	*Deactivates* Autolock

9.5.3.3 DIMMER SUBMENU LAYERS

Layer 3	Layer 4	*Function Description*
Curve (Dimmer Curve)	**Linear**	*Light intensity increases linearly with* DMX *value*
	Exponential	*Adjusts the light intensity finely at lower* DMX *values and broadly at higher* DMX *values*
	Logarithmic	*Adjusts the light intensity broadly at lower* DMX *values and finely at higher* DMX *values*
	S-Curve	*Adjusts the light intensity finely at lower and higher* DMX *values and broadly at medium* DMX *values*
PMW Frequency	650Hz **1530Hz** 3600Hz 12kHz 18.9kHz 25kHz	*Selects the* LED PWM *frequency*
Response	**LED**	*The device responds immediately to changes of the* DMX *value*
	Halogen	*The light behaves in a similar way to a halogen light with gradual changes of brightness*
Redshift	Dim to Warm	*Simulates the colour drift when dimming a halogen light. When dimming the light, the colour temperature changes automatically to increasingly warm white tones and amber (and vice versa).*
	Off	*Disables the function*

9.5.3.4 COLOUR CALIBRATION SUBMENU LAYERS

Layer 3	Layer 4	*Function Description*
RAW	*Controls all colours directly, no calibration*	
User	Red	*Custom colour calibration. Sets red, green, blue, and lime brightness with values ranging from 0 to 255*
	Green	
	Blue	
	...	
Factory	*Calibrated colour mixing for all colours*	
Smart	*No calibration for single colours, activates calibration when mixing colours*	

9.5.3.5 SILENT ZOOM SUBMENU LAYERS

Layer 3	*Function Description*
On	*Reduces movement noise*
Off	*Disables the function*

9.5.3.6 FAN SUBMENU LAYERS

Layer 3	*Function Description*
Auto	*Automatic fan control (controls fans by dimmer value and the device temperature)*
Off	*Deactivates the fans*
Constant Low	*Constant low fan speed with reduced brightness, if necessary*
Constant Mid	*Constant average fan speed with reduced brightness, if necessary*
Constant High	*Constant high fan speed*

9.5.3.7 SIGNAL FAIL SUBMENU LAYERS

Layer 3	*Function Description*
Hold	*Retains the last command*
Last Stand Alone	*Activates the last selected stand-alone operating mode*
Fade to Black (10s)	*10-second fade to blackout*
Blackout	*Activates blackout*
Full	*Switches to full output if signal is lost*

9.5.4 SERVICE MENU

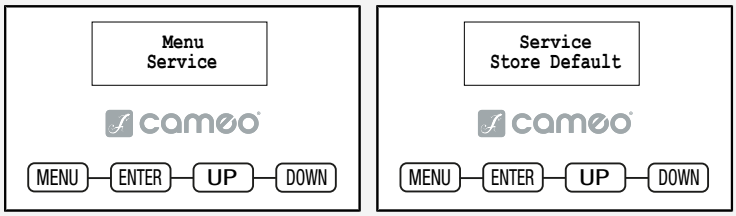

9.5.4.1 SERVICE SUBMENU LAYERS

Layer 2	Layer 3	Layer 4	Layer 5 / *Function Description*
Store Default	User A		*Saves all current settings as user preset A*
	User B		*Saves all current settings as user preset B*
	User C		*Saves all current settings as user preset C*
Load Default	Factory		*Resets to factory setting*
	User A		*Resets to user A values*
	User B		*Resets to user B values*
	User C		*Resets to user C values*
Reset	Zoom		*Resets the zoom*
Test	Test Sequence		*Pre-programmed sequence to test all components*
	Stress Test		*Pre-programmed sequence to test all components under maximum load*

Layer 2	Layer 3	Layer 4	Layer 5 / *Function Description*
Reset Service Timer	No		*Does not reset the service operation time*
	Yes	Reset Now	*Resets the service operating time*
Password	*For service purposes only.*		

9.5.5 SYSTEM INFO MENU

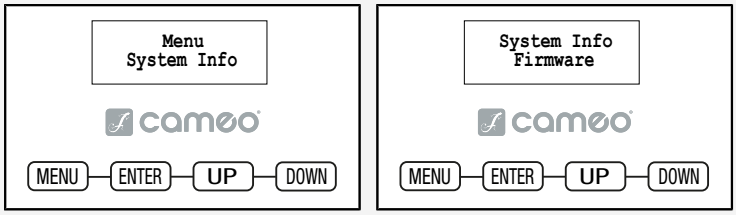

9.5.5.1 SYSTEM INFO SUBMENU LAYERS

Layer 2	Layer 3 / Layer 4 / *Function Description*			
Firmware	DISP	vx.x.x	*Displays the firmware version of the corresponding component*	
	NET	vx.x.x		
	DRV	vx.x.x		
	...			
Wireless	Module		*Displays the wireless module model*	
	Device Name		*Displays the device name*	
	Version		Hardware	*Hardware version number*
			Software	*Software version number*
	Link Quality		%	*Connection quality in percent*
	Data Source		None	*Information on the data source*
			DMX	
			Wireless Link	
			SPI	
			BLE	
	Status		Operational	*Status information*
			DMX Data	
			RDM Identify	
			RF Link	
			Link State	
Temperature	LED		*Displays the temperature of the corresponding component*	
	Base			
	...			

Layer 2	**Layer 3 / Layer 4 / *Function Description***		
	Temperature Unit	° C	*Sets the temperature unit*
		° F	
Fan Speed	Fan X	*Displays the speed of the corresponding fans*	
	Fan Y		
	...		
Humidity	Head	*Displays the relative humidity in percent*	
	Base		
Runtime	Total	*Total operating time*	
	Operation	*Time in use*	
	LED	Total	*Lamp operating time*
		Red	
		Green	
		Blue	
		…	
	Service	*Operating time after resetting the service operating time*	
RDM UID	RDM Unique Identifier		
Error Info	*Displays an error in case of malfunction*		

10 FIRMWARE UPDATE



Update your device firmware using a dedicated update setup.

The update process requires:

- CLIREMOTE

The device includes detailed instructions and the required cable for performing the software update.

Further information and ordering options are available here: *UNICON® - Remote control for DMX fixtures*

11 MAINTENANCE

11.1 PRODUCT MAINTENANCE



CAUTION

Mains Voltage

Risk of electric shock

a. Before you perform maintenance work on the device, disconnect the device from all poles.



NOTICE

Damage to the device and void of warranty

a. Do not use cleaning agents, disinfectants, alcohol, or agents with abrasive effect for cleaning.

Carry out the maintenance measures listed below on a regular basis. The frequency of cleaning depends on the environment in which you use the product. Damp or dirty environments may cause increased soiling and wear.

VISUAL INSPECTION

Check the following points before operating the device.

- ⚠ **WARNING! Risk of electric shock.** Check mains power cables for damage or material fatigue.
- Check all air inlets and outlets for damage, dust, or dirt deposits.
- Check all outside screws and covers for corrosion, damage or excessive wear.
- Check all connectors and rubber sealing caps for damage, dust, or dirt deposits.
- ⚠ **WARNING! Risk of falling objects.** Check that all screws, fasteners, and rigging points are securely tightened.

CLEANING

- Clean the surface with a clean and damp lint-free cotton cloth. Wipe off all excess moisture.
- **NOTICE! Do not use compressed air.** Clean any air inlets and outlets of dust and dirt deposits with a clean and damp lint-free cotton cloth.
- Clean all plug contacts from dust and dirt with a dry lint-free cotton cloth.
- Clean the front glass of your Cameo Lighting device on a monthly basis with a clean and damp lint-free cotton cloth dampened with a 1:1 solution of water and mild detergent. Do not use alcohol, solvents or abrasives.

REPLACING GOBOS

⚠ **CAUTION! Gobos may only be replaced by skilled service personnel.**

11.2 STORING THE DEVICE

Store the device only in a dry and clean environment. If you are storing the individual components of the device, use special protective covers, bags, and cases. Find such accessories for your product in the Adam Hall Shop (https://www.adamhall.com/shop).

12 REPAIR



Do not repair the device.

a. Repairs may only be carried out by specialist personnel authorised by the manufacturer.
b. If your device is damaged or requires service, contact the Adam Hall Customer Service.

13 DISPOSAL

13.1 PACKAGING DISPOSAL



1. You can feed the packaging into the reusable material cycle using the usual disposal methods.
2. Separate the packaging in accordance with the applicable disposal laws and recycling regulations in your country

13.2 DEVICE DISPOSAL



1. This device is subject to the European Directive on Waste Electrical and Electronic Equipment, as amended. WEEE Directive Waste Electrical and Electronic Equipment. Old appliances do not belong in the household waste. The old device must be disposed of via an approved disposal company or a municipal disposal facility. Observe the applicable regulations in your country.
2. Observe all disposal laws applicable in your country.
3. As a private customer, you can obtain information on environmentally friendly disposal options from the seller of the product or the appropriate regional authorities.
4. Retailers are often legally obliged to take back items free of charge.
5. Old appliances that contain harmful substances are labelled with the symbol of a crossed-out dustbin.
6. Current information on the collection rate can be found at the following website: *https://environment.ec.europa.eu/*. Search for the following term: waste-electrical-and-electronic-equipment-weee.

ZIYA® 200 COB & 400 COB

IP65 COB LED ZOOM PAR
DMX CONTROL TABLE



EN: After the adjustments have been made, set the value to 000 to avoid disturbance by endless function call.

DE: Nachdem die Einstellungen vorgenommen wurden, stellen Sie den Wert auf 000 ein, um Störungen durch endlosen Funktionsaufruf zu vermeiden.

FR: Une fois les ajustements effectués, réglez la valeur sur 000 pour éviter les perturbations par appel de fonction sans fin.

ES: Después de realizar los ajustes, establezca el valor en 000 para evitar perturbaciones mediante una llamada de función sin fin.

PL: Po dokonaniu ustawień ustaw wartość na 000, aby uniknąć zakłóceń przez niekończące się wywołanie funkcji.

IT: Dopo aver effettuato le regolazioni, impostare il valore su 000 per evitare disturbi causati da una chiamata a funzione infinita.

5CH CCT	10CH RGB-CCT	13CH Direct CCT			
Channel	**Channel**	**Channel**	**Function**	**Values**	
1	1	1	Dimmer	000 - 255	0 % ... 100 %
2	2	2	Dimmer fine	000 - 255	
				000 - 005	Open
				006 - 010	Closed
				011 - 022	Ramp up/down slow to fast
				023 - 033	Ramp up/down random slow to fast
				034 - 045	Ramp up slow to fast
				046 - 056	Ramp up random slow to fast
	3	3	Strobe Functions	057 - 068	Ramp down slow to fast
				069 - 079	Ramp down random slow to fast
				080 - 102	Random strobe effect slow to fast
				103 - 127	Strobe break effect 5 s ... 1 s (short burst with break)
				128 - 250	Strobe slow to fast (< 1 Hz ... 20 Hz)
				251 - 255	Open
	4	4	Red	000 - 255	0 % ... 100 %
	5	5	Green	000 - 255	0 % ... 100 %
	6	6	Blue	000 - 255	0 % ... 100 %
		7	Amber	000 - 255	0 % ... 100 %
		8	Lime	000 - 255	0 % ... 100 %
				000 - 005	Off
				006 - 006	Warm White
				007 - 046	Warm White to 2700 K
3	7	10	Color Temperature (affects Color Mixing)	047 - 047	Bulb White (2700 K)
				048 - 087	2700K to 3200K

ZIYA® 200 COB & 400 COB

IP65 COB LED ZOOM PAR
DMX CONTROL TABLE

				088	-	088	Halogen White (3200 K)
				089	-	128	3200 K ... 4000 K
				129	-	129	Neutral White (4000 K)
				130	-	169	4000 K ... 5600 K
				170	-	170	Studio White (5600 K)
				171	-	210	5600 K ... 6500 K
				211	-	211	Daylight White (6500 K)
				212	-	251	6500 K to Cold White
				252	-	255	Cold White
4	**8**	**11**	Tint (affects Color Temperature)	000	-	000	Off
				001	-	127	Magenta -> neutral
				128	-	128	Neutral
				129	-	255	Neutral -> green
5	**9**	**12**	Zoom	000	-	255	Narrow to wide
	10	**13**	Device settings (hold value for 3 seconds)	000	-	024	No function
				025	-	025	Record user colour 1
				026	-	026	Record user colour 2
				027	-	027	Record user colour 3
				028	-	028	Record user colour 4
				029	-	029	Record user colour 5
				030	-	030	Record user colour 6
				031	-	031	Record user colour 7
				032	-	032	Record user colour 8
				033	-	073	No function
				074	-	075	Dimmer response LED
				076	-	077	Dimmer response halogen
				078	-	081	No function
				082	-	083	DTW (redshift) on
				084	-	085	DTW (redshift) off
				086	-	093	No function
				094	-	095	Silent movement on
				096	-	097	Silent movement off
				098	-	099	Fan auto
				100	-	101	Fan off
				102	-	103	Fan constant low
				104	-	105	Fan constant medium
				106	-	107	Fan constant high
				108	-	119	No function
				120	-	121	PWM 1 (650 Hz)
				122	-	123	PWM 2 (1530 Hz)
				124	-	125	PWM 3 (3600 Hz)
				126	-	127	PWM 4 (12000 Hz)
				128	-	129	PWM 5 (18900 Hz)
				130	-	131	PWM 6 (25000 Hz)
				132	-	133	RAW

				134	-	135	Factory calibration
				136	-	137	User calibration
				138	-	139	Smart calibration
				140	-	141	Display always on
				142	-	143	Display off after 20 s
				144	-	163	No function
				164	-	165	Dimmer curve linear
				166	-	167	Dimmer curve exponential
				168	-	169	Dimmer curve logarithmic
				170	-	171	Dimmer curve S-curve
				172	-	235	No function
				236	-	237	Reset all
				238	-	239	No function
				240	-	241	Load factory defaults
				242	-	243	No function
				244	-	245	Load user default A
				246	-	247	Load user default B
				248	-	249	Load user default C
				250	-	255	No function

4CH Preset Channel	D5CH Preset Channel	Function	Values			
1	1	Dimmer	000	-	255	0 % ... 100 %
2	2	Strobe Functions	000	-	005	Open
			006	-	010	Closed
			011	-	022	Ramp up/down slow to fast
			023	-	033	Ramp up/down random slow to fast
			034	-	045	Ramp up slow to fast
			046	-	056	Ramp up random slow to fast
			057	-	068	Ramp down slow to fast
			069	-	079	Ramp down random slow to fast
			080	-	102	Random strobe effect slow to fast
			103	-	127	Strobe break effect 5 s ... 1 s (short burst with break)
			128	-	250	Strobe slow to fast (< 1 Hz ... 20 Hz)
			251	-	255	Open
			000	-	005	No function
			006	-	013	Red
			014	-	021	Amber
			022	-	029	Yellow Warm
			030	-	037	Yellow
			038	-	045	Green
			046	-	053	Turquoise
			054	-	061	Cyan

ZIYA® 200 COB & 400 COB

IP65 COB LED ZOOM PAR

DMX CONTROL TABLE

3	3	Color Presets (override Color Mixing & Color Temperature)	062	-	069	Blue
			070	-	077	Lavender
			078	-	085	Mauve
			086	-	093	Magenta
			094	-	101	Pink
			102	-	109	Warm White
			110	-	117	White
			118	-	125	Cold White
			126	-	156	Colour presets speed fast to slow (chase)
			157	-	157	Colour presets speed stop
			158	-	188	Colour presets speed slow to fast (chase) (backwards)
			189	-	219	Colour presets speed fast to slow (fade)
			220	-	220	Colour presets speed stop
			221	-	251	Colour presets speed slow to fast (fade) (backwards)
			252	-	255	No function
4	4	Zoom	000	-	255	Narrow to wide
	5	DMX Delay	000	-	005	Off (no delay)
			006	-	255	0.1 s ... 2.0 s

4CH RGB	D5CH RGB					
Channel	**Channel**	**Function**	**Values**			
1	1	Red	000	-	255	0 % ... 100 %
2	2	Green	000	-	255	0 % ... 100 %
3	3	Blue	000	-	255	0 % ... 100 %
4	4	Zoom	000	-	255	Narrow to wide
	5	DMX Delay	000	-	005	Off (no delay)
			006	-	255	0.1 s ... 2.0 s

7CH Direct	13CH Direct 16Bit					
Channel	**Channel**	**Function**	**Values**			
1	1	Red	000	-	255	0 % ... 100 %
	2	Red fine	000	-	255	
2	3	Green	000	-	255	0 % ... 100 %
	4	Green fine	000	-	255	
3	5	Blue	000	-	255	0 % ... 100 %
	6	Blue fine	000	-	255	
4	7	Amber	000	-	255	0 % ... 100 %
	8	Amber fine	000	-	255	

ZIYA® 200 COB & 400 COB

IP65 COB LED ZOOM PAR

DMX CONTROL TABLE

5	9	Lime	000 - 255	0 % ... 100 %
	10	Lime fine	000 - 255	
6	11	Cyan	000 - 255	0 % ... 100 %
	12	Cyan fine	000 - 255	
7	13	Zoom	000 - 255	Narrow to wide

20CH Full

Channel	Function	Values	
1	Dimmer	000 - 255	0 % ... 100 %
2	Dimmer fine	000 - 255	
3	Strobe Functions	000 - 005	Open
		006 - 010	Closed
		011 - 022	Ramp up/down slow to fast
		023 - 033	Ramp up/down random slow to fast
		034 - 045	Ramp up slow to fast
		046 - 056	Ramp up random slow to fast
		057 - 068	Ramp down slow to fast
		069 - 079	Ramp down random slow to fast
		080 - 102	Random strobe effect slow to fast
		103 - 127	Strobe break effect 5 s ... 1 s (short burst with break)
		128 - 250	Strobe slow to fast (< 1 Hz ... 20 Hz)
		251 - 255	Open
4	Red	000 - 255	0 % ... 100 %
5	Red fine	000 - 255	
6	Green	000 - 255	0 % ... 100 %
7	Green fine	000 - 255	
8	Blue	000 - 255	0 % ... 100 %
9	Blue fine	000 - 255	
10	Amber	000 - 255	0 % ... 100 %
11	Amber fine	000 - 255	
12	Lime	000 - 255	0 % ... 100 %
13	Lime fine	000 - 255	
14	Cyan	000 - 255	0 % ... 100 %
15	Cyan fine	000 - 255	
16	Color Temperature (affects Color Mixing)	000 - 005	Off
		006 - 006	Warm White
		007 - 046	Warm White to 2700 K
		047 - 047	Bulb White (2700 K)
		048 - 087	2700K to 3200K
		088 - 088	Halogen White (3200 K)
		089 - 128	3200 K ... 4000 K
		129 - 129	Neutral White (4000 K)
		130 - 169	4000 K ... 5600 K

		170	-	170	Studio White (5600 K)
		171	-	210	5600 K ... 6500 K
		211	-	211	Daylight White (6500 K)
		212	-	251	6500 K to Cold White
		252	-	255	Cold White
17	Tint (affects Color Temperature)	000	-	000	Off
		001	-	127	Magenta -> neutral
		128	-	128	Neutral
		129	-	255	Neutral -> green
18	Color Presets (override Color Mixing & Color Temperature)	000	-	005	No function
		006	-	013	Red
		014	-	021	Amber
		022	-	029	Yellow Warm
		030	-	037	Yellow
		038	-	045	Green
		046	-	053	Turquoise
		054	-	061	Cyan
		062	-	069	Blue
		070	-	077	Lavender
		078	-	085	Mauve
		086	-	093	Magenta
		094	-	101	Pink
		102	-	109	Warm White
		110	-	117	White
		118	-	125	Cold White
		126	-	156	Colour presets speed fast to slow (chase)
		157	-	157	Colour presets speed stop
		158	-	188	Colour presets speed slow to fast (chase) (backwards)
		189	-	219	Colour presets speed fast to slow (fade)
		220	-	220	Colour presets speed stop
		221	-	251	Colour presets speed slow to fast (fade) (backwards)
		252	-	255	No function
19	Zoom	000	-	255	Narrow to wide
		000	-	024	No function
		025	-	025	Record user colour 1
		026	-	026	Record user colour 2
		027	-	027	Record user colour 3
		028	-	028	Record user colour 4
		029	-	029	Record user colour 5
		030	-	030	Record user colour 6
		031	-	031	Record user colour 7
		032	-	032	Record user colour 8

20	Device settings (hold value for 3 seconds)	033	-	073	No function
		074	-	075	Dimmer response LED
		076	-	077	Dimmer response halogen
		078	-	081	No function
		082	-	083	DTW (redshift) on
		084	-	085	DTW (redshift) off
		086	-	093	No function
		094	-	095	Silent movement on
		096	-	097	Silent movement off
		098	-	099	Fan auto
		100	-	101	Fan off
		102	-	103	Fan constant low
		104	-	105	Fan constant medium
		106	-	107	Fan constant high
		108	-	119	No function
		120	-	121	PWM 1 (650 Hz)
		122	-	123	PWM 2 (1530 Hz)
		124	-	125	PWM 3 (3600 Hz)
		126	-	127	PWM 4 (12000 Hz)
		128	-	129	PWM 5 (18900 Hz)
		130	-	131	PWM 6 (25000 Hz)
		132	-	133	RAW
		134	-	135	Factory calibration
		136	-	137	User calibration
		138	-	139	Smart calibration
		140	-	141	Display always on
		142	-	143	Display off after 20 s
		144	-	163	No function
		164	-	165	Dimmer curve linear
		166	-	167	Dimmer curve exponential
		168	-	169	Dimmer curve logarithmic
		170	-	171	Dimmer curve S-curve
		172	-	235	No function
		236	-	237	Reset all
		238	-	239	No function
		240	-	241	Load factory defaults
		242	-	243	No function
		244	-	245	Load user default A
		246	-	247	Load user default B
		248	-	249	Load user default C
		250	-	255	No function

ZIYA® 200 COB & 400 COB

IP65 COB LED ZOOM PAR

DMX CONTROL TABLE

3CH UNI-SENS			
Channel	**Function**	**Values**	
1	Dimmer	000 - 255	0 % ... 100 %
2	Dimmer fine	000 - 255	
3	Zoom	000 - 255	Narrow to wide

INDEX

A

Accessories 15
Assembly
- Barndoor 25
- Omega bracket 24
- TV spigot 24

B

Barndoor 25

C

Cleaning 43
Connecting
- Power supply 28

Customer Service 7

D

Disconnecting power supply 28
DMX
- Start address 30
- Technology 19

M

Mains power cable 28

N

Navigating 29

O

Omega bracket 23
Optional accessories 15
Overview
- Main screen 34
- Product 15
- User interface 18

P

Power supply 28
powerCON® 28

S

Safety cable 27
Scope of delivery 22
Securing 27
Slave mode 32
Stand-alone mode 31
Storing 43
Submenu
- Colour calibration 38
- Dimmer 38
- Display 37
- Fan 39
- Signal fail 39
- Silent zoom 38
- Wireless 36

T

Technical data 16
TV spigot 24

U

User interface 18

cameo