USER MANUAL

cameo

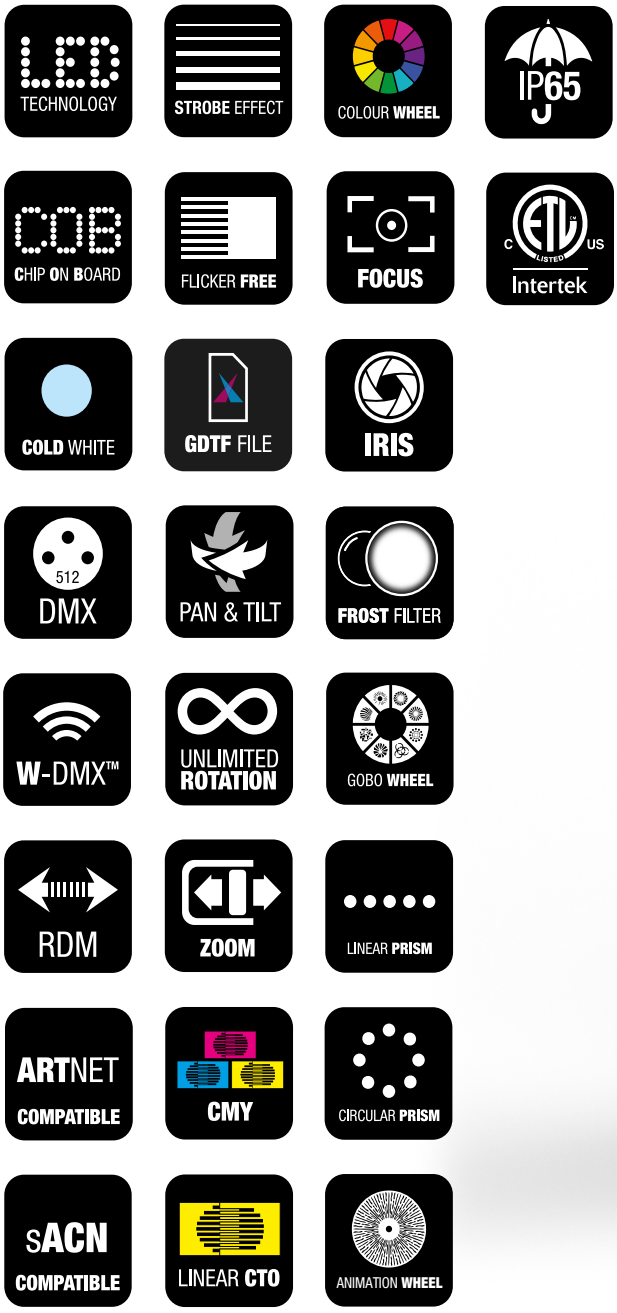



OPUS® H6 IP

IP65 HYBRID MOVING HEAD

CLOH6IP;

en-GB

TABLE OF CONTENTS

1 DOCUMENT VERSION AND REVISIONS 6

2 INTRODUCTION 7

2.1 You Made the Right Choice! 7

2.2 Contacts 7

2.3 Link to the Download Centre 7

2.4 Visualisation Conventions in This User Manual 7

3 PRODUCT COMPLIANCE 9

3.1 Manufacturer's Declaration 9

3.2 Declaration of Conformity 9

4 SAFETY INSTRUCTIONS 11

4.1 Intended Use 11

4.2 Explanation of Safety and Warning Symbols 11

4.3 Structure of Warning Messages 12

4.4 General Safety 12

4.5 Electrical Safety 13

4.6 Physical Safety 13

4.7 Photobiological Safety 14

4.8 Thermal Safety 14

4.9 Wireless Safety 14

4.10 Device Safety 15

5 PRODUCT DESCRIPTION 16

5.1 Product Overview 16

5.2 Technical Data 16

5.3 User Interface 18

5.3.1 Front Panel Overview 18

5.3.2 Rear Panel Overview 19

6 GENERAL INFORMATION 20

6.1 About DMX Technology 20

6.1.1 DMX Standard 20

6.1.2 DMX Connection 20

6.1.2.1 Connecting Multiple Fixtures 20

6.1.3 Pin Assignment 20

6.1.4 DMX Terminators 21

6.1.5 DMX Adapters 21
6.2 Explanation of the IP Rating 21
7 PREPARATION 23
7.1 Scope of Delivery 23
7.2 Transport 23
7.2.1 Using the Side Recesses or Base Handles for Transport 23
7.2.2 Unlocking the Tilt Lock 24
7.2.3 Unlocking the Pan Lock 24
7.2.4 Locking the Tilt Lock 25
7.2.5 Locking the Pan Lock 25
8 INSTALLATION 26
8.1 Omega Bracket Mounting Mechanism Overview 26
8.2 Attaching Omega Brackets 26
9 OPERATION 28
9.1 Power Supply 28
9.1.1 Connecting a Mains Power Cable 28
9.1.2 Disconnecting a Mains Power Cable 28
9.2 Device Navigation 29
9.2.1 Using the Control Panel 29
9.2.2 Activating / Deactivating Autolock 29
9.2.3 Using the Battery-powered Display 30
9.3 Device Configuration 30
9.3.1 Setting the DMX Start Address 30
9.3.2 Setting the DMX Mode 30
9.3.3 Setting the Network 31
9.3.4 Setting the IP Address 31
9.3.5 Setting the Subnet Mask 31
9.3.6 Setting the Stand-Alone Mode 32
9.3.7 Setting the Slave Mode 32
9.3.8 Extended Slave Mode 33
9.3.8.1 Setup for a Running Light Effect 33
9.3.8.2 Setup for a Running Light Effect with Master and First Slave in Sync 33
9.3.9 Pairing a Wireless DMX Receiver with a Transmitter 33
9.3.10 About Linking Key 33
9.3.11 Pairing a Wireless DMX Receiver with a Transmitter via Linking Key 34
9.3.12 Unlinking a Wireless DMX Receiver from a Transmitter 34

9.3.13 Configuring Quicklight 34
9.4 Main Screen Overview 35
9.5 Submenus 36
9.5.1 About the Submenus 36
9.5.2 Control Menu 36
9.5.2.1 Network Art-Net Submenu Layers 36
9.5.2.2 Network sACN Submenu Layers 37
9.5.2.3 Stand-Alone Submenu Layers 37
9.5.3 Settings Menu 38
9.5.3.1 Wireless Submenu Layers 38
9.5.3.2 Dimmer Submenu Layers 39
9.5.3.3 Fan Submenu Layers 39
9.5.3.4 Movement Submenu Layers 40
9.5.3.5 Wheels Submenu Layers 40
9.5.3.6 Sun Protection Submenu Layers 41
9.5.3.7 Signal Fail Submenu Layers 41
9.5.3.8 Display Submenu Layers 41
9.5.4 Service Menu 42
9.5.4.1 Service Function Submenu Layers 42
9.5.5 System Info Menu 43
9.5.5.1 System Info Submenu Layers 43
10 FIRMWARE UPDATE 45
11 MAINTENANCE 46
11.1 Product Maintenance 46
11.2 Storing the Device 46
12 REPAIR 47
13 DISPOSAL 48
13.1 Packaging Disposal 48
13.2 Device Disposal 48
14 DMX CONTROL TABLE 49
INDEX 58

1 DOCUMENT VERSION AND REVISIONS

Version	Date	Implemented changes
v1.0	05/2026	Original version

2 INTRODUCTION

2.1 YOU MADE THE RIGHT CHOICE!

This product has been developed and manufactured to the highest quality standards to ensure many years of problem-free operation. Find further information about Cameo on our website: www.cameolight.com

2.2 CONTACTS

	Adam Hall GmbH Headquarter	Customer Service
E-mail	info@adamhall.com	customerservice@adamhall.com
Phone	+49 6081 9419-0	+49 6081 941973-0
Street	Adam-Hall-Str. 1	Adam-Hall-Str. 1
Postal code / city	61267 Neu-Anspach	61267 Neu-Anspach
Website	*www.adamhall.com*	*www.adamhall.com*

2.3 LINK TO THE DOWNLOAD CENTRE

You can download some information, such as CAD data or technical data, from the Download Centre. Scan the QR code or click the link to download this information:

2.4 VISUALISATION CONVENTIONS IN THIS USER MANUAL

In this manual we use graphical symbols and icons in certain contexts. Find below a table with explanations and use cases of the graphical symbols and icons.

Icon / Symbol	Designation	Context	Explanation / Example
↙	**Prerequisite**	Tasks	Used in task topics to indicate a prerequisite that must be met before beginning the task.
⇨	**Result / Intermediate Result**	Tasks	Used in task topics to indicate a result or intermediate result of an action step.
1 Step **a)** Substep	**1 Action Step** **a) Substep**	Tasks	Used in task topics to indicate action steps and substeps.
1	**Callout**	Graphics; tasks	Text-image reference or labeling of certain functions on the device

Icon / Symbol	Designation	Context	Explanation / Example
[...]	**Value range indicator**	Technical data; paragraphs; lists	Indicates the range of a value, such as "Compressor ratio: **1:1...20:1**". Mostly used in tables or callouts.
*	**Asterisk**	Paragraphs; tables	Indicates additional information in a footnote.
The **LIM** LED lights up	**General User Interface element**	Paragraphs; tasks; tables; lists	The words presented in this way represent graphic user interface elements on the device.
PAGE button	**Key / Button**	Paragraphs; tasks; tables; lists	The words presented in this way represent user interface controls on the device.
`<name>`	**User input**	Paragraphs; tasks; tables; lists	The words presented in this way represent required user inputs.
https://adamhall.com	**Weblink**	Paragraphs; tables; lists	External link to a website

3 PRODUCT COMPLIANCE

3.1 MANUFACTURER'S DECLARATION

Adam Hall offers a voluntary, EU-wide manufacturer's guarantee of 2 years. The statutory warranty period is not affected by this voluntary guarantee.

Visit the Adam Hall Service Portal to access the **Download Centre**:

https://portal.adamhall.com/

Under the **Service & Regulations** section, you find our current detailed manufacturer's declarations, warranty conditions, and limitation of liability.

To request warranty for a product, please contact:

Adam Hall GmbH, Adam-Hall-Str. 1, 61267 Neu-Anspach

customerservice@adamhall.com

0049 (0)6081 / 9419-1000

3.2 DECLARATION OF CONFORMITY

Hereby, Adam Hall Ltd. declares that this product meets the following guidelines (where applicable)

- Electrical Equipment (Safety) Regulations 2016
- Electromagnetic Compatibility Regulations 2016 (SI 2016/1091)
- The Restriction of the Use of Certain Hazardous Substances in Electrical and Electronic Equipment Regulation 2012 (SI 2012/3032)
- Radio Equipment Regulations 2017 (SI 2016/2015)

Products that are subject to Electrical Equipment(Safety)Regulation 2016, EMC Regulation 2016 or RoHS Regulation can be requested at info@adamhall.com. Products that are subject to the Radio Equipments Regulations 2017 (SI2017/1206) can be downloaded at *http://www.adamhall.com/compliance*.

FCC STATEMENT

This device complies with part 15 of the FCC Rules. Operation is subject to the following two conditions:

1. This device may not cause harmful interference.
2. This device must accept any interference received, including interference that may cause undesired operation.

⚠ CAUTION! RF Exposure Information: This equipment complies with FCC radiation exposure limits set forth for an uncontrolled environment. This equipment should be installed and operated with minimum distance 20 cm between the radiator and your body.

⚠ CAUTION! Any changes or modifications to this device not explicitly approved by the manufacturer could void your authority to operate this equipment.

This equipment has been tested and found to comply with the limits for a Class B digital device, pursuant to part 15 of the FCC Rules. These limits are designed to provide reasonable protection against harmful interference in a residential installation. This equipment generates, uses and can radiate radio frequency energy and, if not installed and used in accordance with the instructions, may cause harmful interference to radio communications. However, there is no guarantee that interference will not occur in a particular installation. If this equipment does cause harmful interference to radio or television reception, which can be determined by turning the equipment off and on, the user is encouraged to try to correct the interference by one or more of the following measures:

- Reorient or relocate the receiving antenna.
- Increase the separation between the equipment and receiver.
- Connect the equipment into an outlet on a circuit different from that to which the receiver is connected to.
- Consult the dealer or an experienced radio/TV technician for help.

ISED STATEMENT

This device contains licence-exempt transmitter(s)/receiver(s) that comply with Innovation, Science and Economic Development Canada's licence-exempt RSS(s). Operation is subject to the following two conditions:

1. This device may not cause interference.
2. This device must accept any interference, including interference that may cause undesired operation of the device.

The digital apparatus complies with Canadian CAN ICES-005 (B)/NMB-005(B).

This equipment complies with IC RSS-102 radiation exposure limits set forth for an uncontrolled environment. This equipment should be installed and operated with minimum distance 20 cm between the radiator and your body.

This device meets the exemption from the routine evaluation limits in section 2.5 of RSS 102 and compliance with RSS 102 RF exposure, users can obtain Canadian information on RF exposure and compliance.

4 SAFETY INSTRUCTIONS

4.1 INTENDED USE

The **OPUS® H6 IP** is intended for use as a motorised lighting device to generate controllable light output and movement in event and entertainment environments.
This product has been developed for the professional use in the field of event technology. Furthermore it is intended for qualified users with specialist knowledge of event technology only.
This product is intended for mobile applications and not for fixed installations.
This product is intended for temporary outdoor use only.
This product is not suitable for domestic use.
Do not use the product outside the operating conditions as stated in the user manual under Technical Data. Liability for damage and third-party damage to persons and property due to inappropriate use is excluded.
This product is not suitable for children and persons with limited physical, sensory, or mental capabilities or lack of experience and knowledge.

4.2 EXPLANATION OF SAFETY AND WARNING SYMBOLS

Find the following safety and warning symbols on the device, the user manual, or the packaging:


This symbol indicates that you must read the complete user manual before using the product.


This symbol indicates a general hazardous situation.


This symbol indicates hazards that can cause electric shock.


This symbol indicates hazards caused by hot surfaces.


This symbol indicates tripping hazards.


This symbol indicates hazards due to corrosive substances.


This symbol indicates hazards due to toxic substances.


This symbol indicates hazards due to leaking batteries.


This symbol indicates pinching hazards.


This symbol indicates hazards due to overhead loads.



This symbol indicates hazards due to optical radiation



This symbol indicates that looking or staring into the light source must be avoided.

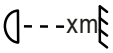

This symbol indicates the minimum distance in meters (m) between the light head and the illuminated surface. Find the corresponding value for this device under Technical Data in the complete user manual and as imprint on the housing of the device.



This symbol indicates that the product is not suitable for household use.



This symbol indicates helpful hints or additional information.

4.3 STRUCTURE OF WARNING MESSAGES

In this user manual, warning messages are structured with a safety symbol, a signal word, a hazard description, and instructions on how to avoid injuries or death.



DANGER

Indicates a hazardous situation which will result in death or serious injury.



WARNING

Indicates a hazardous situation which could result in death or serious injury



CAUTION

Indicates a hazardous situation which could result in minor or moderate injury.



NOTICE

Indicates situations or conditions that could result in damage to property and/or the environment.

4.4 GENERAL SAFETY





- Read this document carefully.
- Keep this document for later reference.
- Follow closely the instructions in this document.
- This document is an integral part of the product. If you sell or pass on the product, you must include this document.
- Only use this product according to its intended use.
- Risk of choking. Keep small parts away from children and individuals with impaired physical, sensory, or mental capabilities.
- Risk of suffocation. Keep plastic bags away from children and individuals with impaired physical, sensory, or mental capabilities.
- Observe all safety instructions and warning messages in this document, on the device, and on the packaging.

- Products are subject to continuous further development. If you find discrepancies between this document and the product labeling, the information on the product always takes priority.
- Do not remove safety instructions or warning messages from the product.
- Do not open the device.
- Do not modify the product.
- If the product shows any sign of damage, do not use it.
- Do not operate the product with removed or missing covers.
- Do not expose the product to direct sunlight.
- If not further specified in the user manual under Technical Data, do not use the product in ambient temperatures that exceed 45 °C / 113 °F or fall below -15 °C / 4 °F
- Do not use the product in tropical climate.
- Do not use the product above 2000 metres of altitude.
- Unless otherwise stated, do not use the product under marine conditions.
- Use only accessories specified by the manufacturer.
- Maintenance and repairs may only be carried out by authorized service personnel.
- Store and transport the product in a dry and safe environment.
- Clean the product on a regular basis. If applicable, see the user manual for maintenance intervals.
- If the device was exposed to strong temperature changes, such as during transport, do not switch it on immediately. Wait until the device has reached ambient temperature.

4.5 ELECTRICAL SAFETY



- This is an electrical device in protection class I. Make sure that the protective conductor is connected to electrical earth. Do not disconnect the protective conductor.
- Do not bypass the mains fuse.
- Use only mains fuses as specified by the manufacturer.
- Do not use kinked or otherwise damaged power cables.
- Only operate the device on compliant, tested and intact mains power outlets.
- Make sure that the voltage and frequency of the mains power match the values specified by the manufacturer.
- Take suitable measures against overvoltage, such as lightning strikes.
- For devices with a power out connector, make sure the total current consumption of all connected devices does not exceed the value specified by the manufacturer.
- This device is not suitable for continuous current.
- Disconnect the device from all poles before maintenance, repair or extend periods of non-use.
- Permanently connected power cables may only be replaced by a qualified service technician.

4.6 PHYSICAL SAFETY



- Make sure that all mounting connections are adequately dimensioned. Observe the relevant regional safety guidelines when mounting the device.



- Make sure that the device and any accessories are securely positioned. Secure against unintentional movement.
- Check all load-bearing screw connections regularly and replace them if necessary.
- Check all cable routes to prevent tripping accidents.





- Moving components, such as mounting brackets, pose a risk of pinching injuries.
- Devices with motor-driven components, such as moving lights, pose a risk of injury due to the movement of the appliance.

4.7 PHOTOBIOLOGICAL SAFETY





- Risk of eye damage. This device is a risk group 2 device. Do not look directly into the light outlet. Do not stare into the light beam. Do not look directly into the lamp with any optical instrument, such as magnifiers or binoculars.
- Risk of seizures. Stroboscopic effects may cause epileptic seizures in susceptible persons.
- Always point the lamp towards the ground, when it is not in use.

4.8 THERMAL SAFETY



- Do not install the device near heat sources, such as radiators or ovens.
- Do not block any ventilation openings.
- Unless otherwise stated, keep a minimum clearance of at least 20 centimetres around the device.
- Unless otherwise stated, keep flammable materials, such as paper or wood, at least 50 centimetres away from the device
- Risk of burning. The device housing can become very hot during normal operation. Make sure that the housing cannot be touched accidentally. Allow the device to cool down sufficiently before dismantling, maintenance work, transport, or charging.
- Always adhere to the minimum distance to the illuminated surface, as stated on the device.

4.9 WIRELESS SAFETY



Risk of injury and damage to devices. Do not use W-DMX™ transmissions for safety-relevant applications, such as DMX-controlled motors, DMX-controlled hydraulic systems, or comparable moving components. Do not use W-DMX™ transmissions for pyrotechnic devices, gas effects, or liquid effects. This includes CO2 cannons, confetti shooters, and similar effects.

Radio transmitter operation is subject to official regulations. Make sure you adhere to regional guidelines before commissioning.

Radio operation can lead to potentially dangerous effects. Do not use this device in sensitive areas such as:

- Hospitals, health centres or other healthcare facilities that provide patient treatment with skilled personnel and equipment
- Explosive atmospheres, including:
  - ATEX zones (Zone 0, 1, 2, 20, 21, 22) (EU)
  - Hazardous Locations Class I, II and III (US/Canada)
- Restricted areas
- Military facilities
- Areas where the use of mobile phones is prohibited, such as aircrafts.

Quality and performance of wireless signal transmissions is dependent on the environmental conditions. All range specifications refer to free-field application with visual contact without interference. Range and signal stability may be influenced by:

- Shielding, such as masonry, metal buildings, or water
- Interference
- High radio traffic, such as strong W-LAN networks
- Electromagnetic radiation, such as LED video walls or dimmers

4.10 DEVICE SAFETY

- Do not switch the device on and off in quick succession, because this will shorten the device lifetime.
- Do not lift the device by the head or the yoke. Only lift the device by the base carrying handles.
- Do not expose the device to direct sunlight, laser radiation, and bundled light beams from other spotlights to prevent damage to the housing and internal components.
  - Use the device's sunlight protection via DMX.

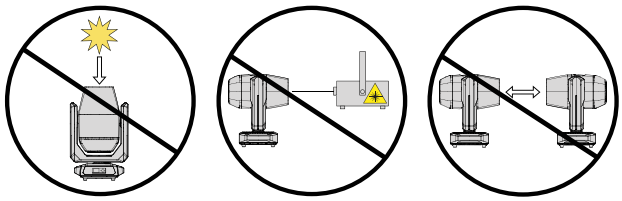

5 PRODUCT DESCRIPTION

5.1 PRODUCT OVERVIEW

The **OPUS® H6 IP** is an IP65 Hybrid Moving Head.

FEATURES:

- 600 W LED
- Use as a beam, spot, and wash light
- Light output: 22,000 lm
- CRI: > 85
- Continuous pan rotation
- Zoom range: 1.8° … 53°
- Four prisms on two levels
- Compact design and low weight (< 30 kg)
- 186 mm front lens
- NFC-ready for quick set-up as well as service and maintenance processes

5.2 TECHNICAL DATA

PHOTOMETRIC VALUES

Parameter	Value
Luminous flux	22000 lm
Front lens diameter	186 mm
Zoom range	1.8° … 53°
LED PWM frequency	650 Hz, 1,530 Hz, 3,600 Hz, 12 kHz, 18.9 kHz, 25 kHz
Dimmer resolution	16 Bit
Dimmer curves	Exponential, Logarithmic, S curve, Linear

COLOURS

Parameter	Value
Colour mix functions	CMY + CTO
Correlated colour temperature (CCT)	2600 K ... 6500 K
CTO function	Linear (continuous)

MOVEMENT

Parameter	Value
Pan	630°
Endless Pan	Yes
Tilt	270°

EFFECTS

Parameter	Value
Gobo wheels	2
Gobo wheel 1 – functions	Rotatable
Gobo wheel 1 – gobos	7
Gobo wheel 2 – functions	Fixed
Gobo wheel 2– gobos	14
Prism layers	2
Prisms in total	4
Strobe	0 Hz … 20 Hz
Frost	2
Animation	Yes

CONTROL

Parameter	Value
Controller protocols	DMX512, RDM, Art-Net, sACN, W-DMX™ (Trans-ceiver), CRMX
Stand-alone operating modes	Master/Slave, Stand-alone
Data in connector	XLR 5-pole male, RJ-45 socket
Data out connector	XLR 5-pole female, RJ-45 socket

MAINS OPERATION

Parameter	Value
Operation voltage	100 V AC … 240V AC / 50 Hz … 60 Hz
Rated power	940 W
Min. Cos Phi power factor (230 V)	0.99
Rated current	4.13 A
Mains connector	Mains plug device outdoor male & TRUE1®
Fuse replacement	Possible from the outside without opening
Power out connector	Mains plug device outdoor female & TRUE1®
Maximum output current	11 A

HOUSING

Parameter	Value
Cabinet material	Aluminium
Coating	Powder coated
Colour	Black

COOLING

Parameter	Value
Cooling system	Temperature-controlled fan cooling
Cooling modes	Auto, Constant High, Constant Low, Constant Mid, Silent, Off

ENVIRONMENTAL

Parameter	Value
Protection class	IP65
Ambient temperature	-20 °C ... 45 °C

DIMENSIONS & WEIGHT

Parameter	Value
Width	408 mm
Height	688 mm
Depth	258 mm
Weight	30 kg

5.3 USER INTERFACE

5.3.1 FRONT PANEL OVERVIEW

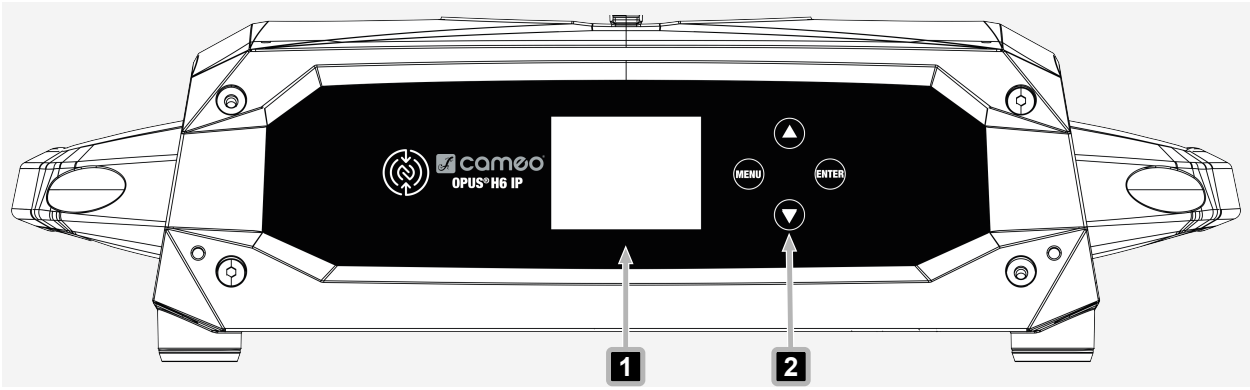

1 **LC - Display** - Main graphic display

2 **Touch-sensitive controls** - Opens the menu structure and navigates the device

5.3.2 REAR PANEL OVERVIEW

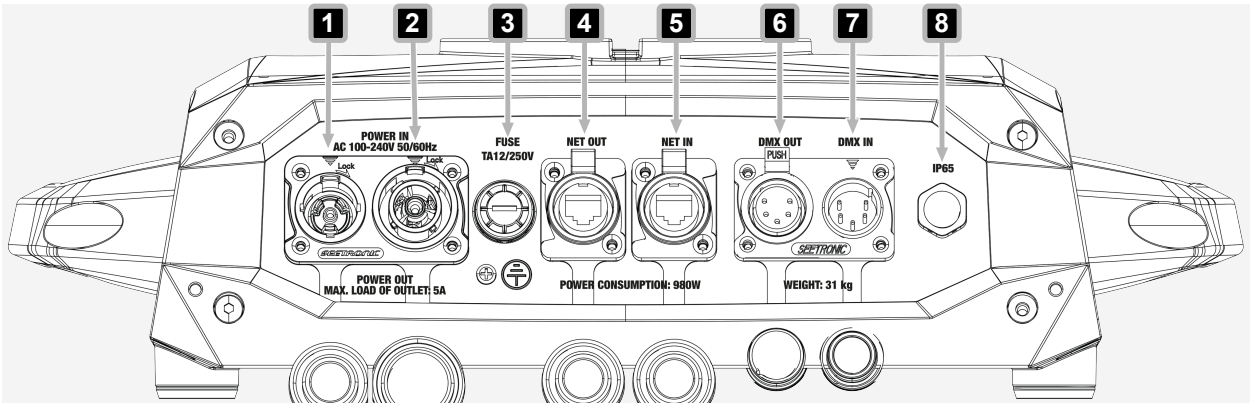

1 **POWER IN** - IP65 mains power socket. When not in use, seal with rubber sealing cap.

2 **POWER OUT** - IP65 mains power output socket. Enables power supply to other **CAMEO** devices. Make sure that the total current consumption of all connected devices does not exceed the value specified on the device. When not in use, seal with rubber sealing cap.

3 **FUSE** - IP65 fuse holder for five 20mm fuses. Only replace with fuses of the same type and value, as specified under Technical Data. Reseal the fuse holder to ensure IP65 seal.

4 **NET OUT** - RJ45 network output connector to Art-Net or sACN network. When not in use, seal with rubber sealing cap.

5 **NET IN** - RJ45 network input connector to Art-Net or sACN network. When not in use, seal with rubber sealing cap

6 **DMX OUT** - Female IP65 5-pin XLR socket for relay of DMX control signal. When not in use, seal with rubber sealing cap.

7 **DMX IN** - Male IP65 5-pin XLR socket for connection of an DMX control device. When not in use, seal with rubber sealing cap.

8 **Pressure equalisation valve** - Balances internal pressure, prevents moisture ingress and reduces condensation

6 GENERAL INFORMATION

6.1 ABOUT DMX TECHNOLOGY

6.1.1 DMX STANDARD

DMX (Digital Multiplex) is a universal transmission protocol for sending a serial data stream from controllers to fixtures. DMX is the common 'language' used to control a large number of fixture types and models from different manufacturers. Fixtures can be connected with one another and controlled via a central controller.

6.1.2 DMX CONNECTION

The DMX data stream is forwarded from one connected fixture to the next via the DMX input and DMX output connectors (3-pin XLR or 5-pin XLR). The maximum number of fixtures in the chain must not exceed 32 units. The last fixture in the chain must be equipped with a terminating resistor (terminator).
For optimum data transmission, it is necessary to keep the connecting cables between the individual fixtures as short as possible. The order in which the devices are integrated in the DMX network has no influence on the addresses.

6.1.2.1 CONNECTING MULTIPLE FIXTURES

1. Connect the male XLR connector (3-pin or 5-pin) of the DMX cable to the DMX output (female XLR socket) of the DMX controller.
2. Connect the female XLR connector (3-pin or 5-pin) of the DMX cable to the DMX input (male XLR socket) of the first fixture.
3. Daisy chain all other fixtures in the same way by connecting the DMX output (female XLR socket) to the DMX input (male XLR socket) of the next fixture.

> The maximum number of fixtures in the chain must not exceed 32 units.

6.1.3 PIN ASSIGNMENT

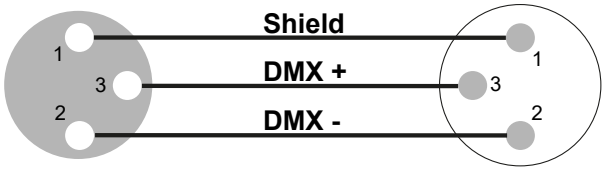

DMX cable with 3-pin XLR connectors

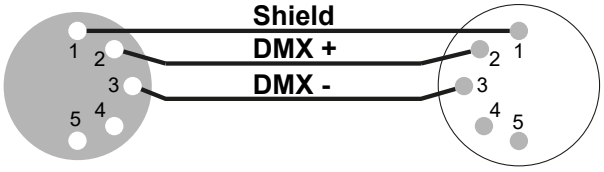

DMX cable with 5-pin XLR connectors (pin 4 and 5 are not used)

6.1.4 DMX TERMINATORS

The last fixture in a DMX chain needs to be equipped with a terminating resistor (120 Ω, 0,25 W) to prevent system errors.

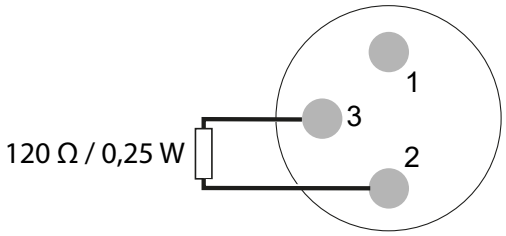

DMX Terminator 3-pin

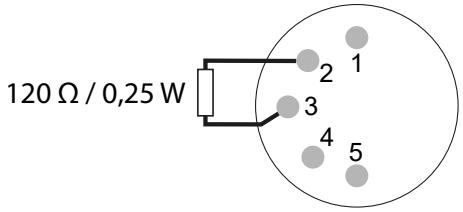

DMX Terminator 5-pin

6.1.5 DMX ADAPTERS

The combination of DMX fixtures with 3-pin connections and DMX fixtures with 5-pin connections in a DMX chain is possible with suitable adapters.

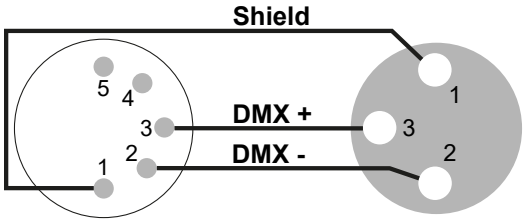

DMX Adapter 5-pin XLR male to 3-pin XLR female

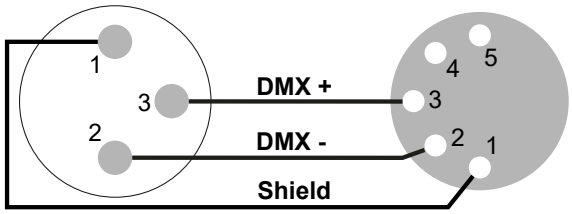

DMX Adapter 3-pin XLR male to 5-pin XLR female

6.2 EXPLANATION OF THE IP RATING

The IP rating or ingress protection code indicates how well a device is protected against water, dust, solid foreign objects, and contact with hazardous parts.

IP Rating does not describe general bad weather resistance.

The first identification digit indicates the level of protection against the ingress from dust, solid foreign bodies and contact with hazardous parts:

IP2X	Protection against solid foreign bodies ≥ 12.5 mm in diameter
IP3X	Protection against solid foreign bodies ≥ 2.5 mm in diameter
IP4X	Protection against solid foreign bodies ≥ 1.0 mm in diameter
IP5X	Protection against dust in harmful quantities and completely protected against contact.
IP6X	Dust-tight and completely protected against contact from solid foreign bodies

Table 1: IP Rating - First identification digit

The second identification digit indicates the level of protection against the ingress from water:

IPX0	No protection
IPX1	Protection against dripping water
IPX2	Protection against dripping water when the device is tilted up to 15°
IPX3	Protection against falling spray water up to 60° from the vertical
IPX4	Protection against splashing water on all sides
IPX5	Protection against water jets (nozzle) from any angle
IPX6	Protection against strong water jets
IPX7	Protection against temporary immersion and ingress of water in harmful quantity

Table 2: IP Rating - Second identification digit

7 PREPARATION

7.1 SCOPE OF DELIVERY

Item Description	Quantity
Device	1
Mains power cable	1
OMEGA BRACKET 3	2
Safety Compliance Information	1

7.2 TRANSPORT

NOTICE

Pan Lock or Tilt Lock unlocked during installation

Risk of damage to the device

a. Keep Pan Lock and Tilt Lock locked until the device is installed in its final position.

7.2.1 USING THE SIDE RECESSES OR BASE HANDLES FOR TRANSPORT

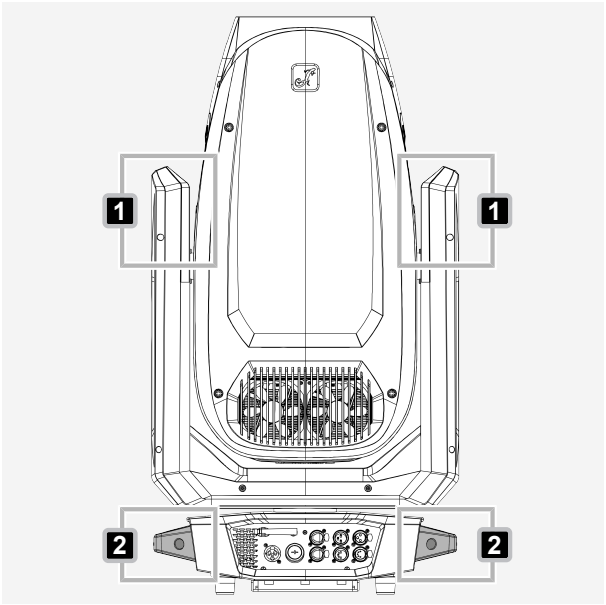

1 Use the recessed grips 1 to lift or reposition the fixture.

2 Use the transport handles 2 to move the fixture over longer distances.

NOTICE! Risk of damage to internal arm components. The recessed grips are intended only for lifting or short repositioning. To protect the internal arm components, use the transport handles exclusively for longer transports.

7.2.2 UNLOCKING THE TILT LOCK

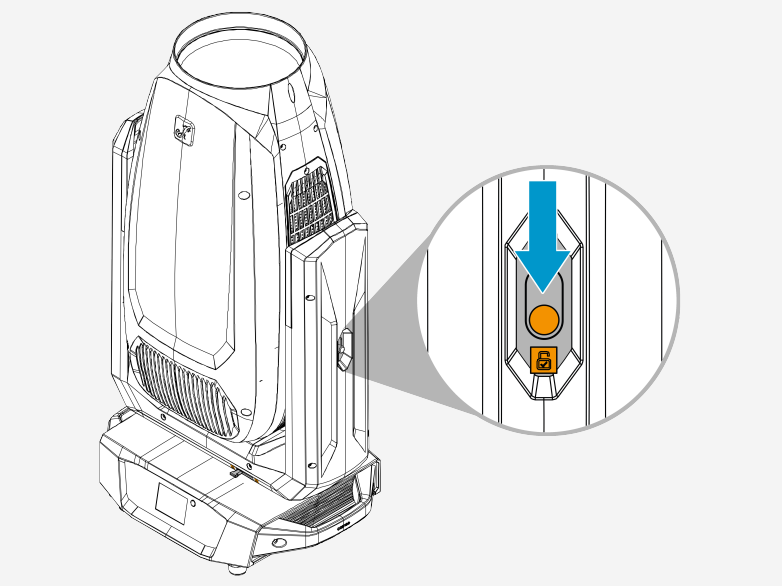

1 Slide the Tilt Lock mechanism to the unlocked position.

7.2.3 UNLOCKING THE PAN LOCK

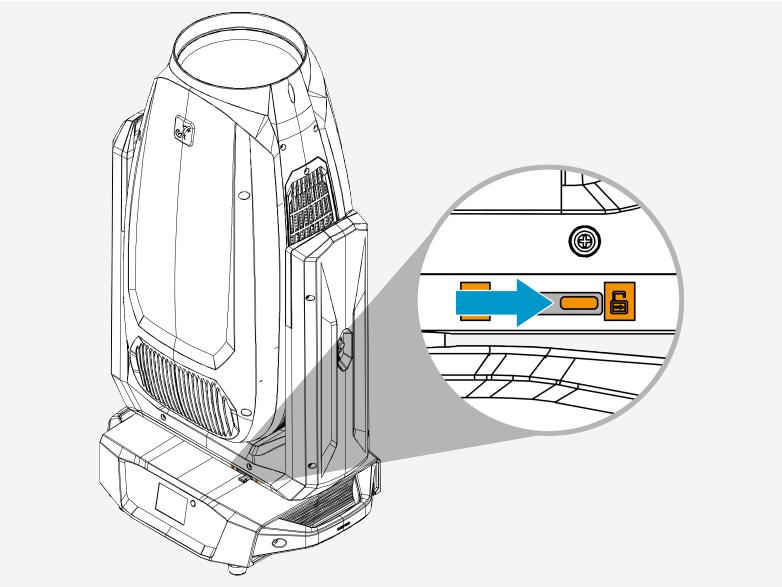

1 Slide the Pan Lock mechanism to the unlocked position.

7.2.4 LOCKING THE TILT LOCK

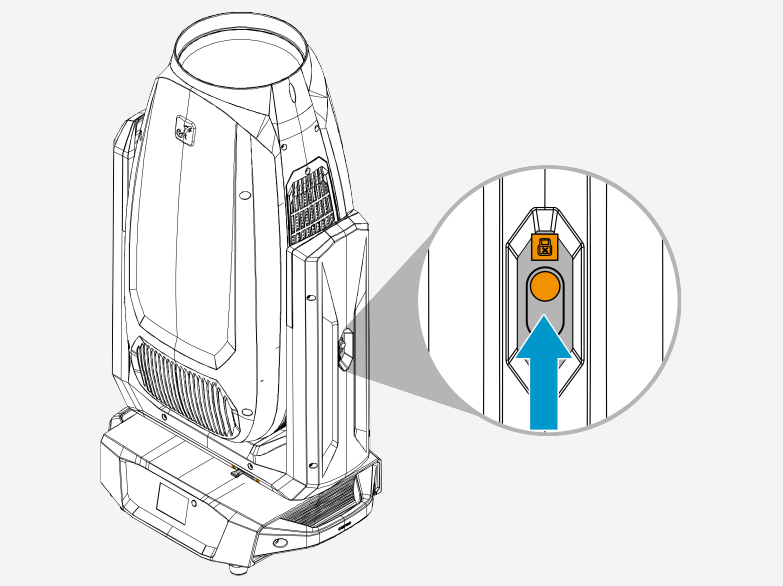

1. Disconnect the power supply.
   ⇨ The fixture is powered off.
2. Rotate the head until it aligns with the designated tilt-lock position.
3. Slide the Tilt Lock mechanism to the locked position.

7.2.5 LOCKING THE PAN LOCK

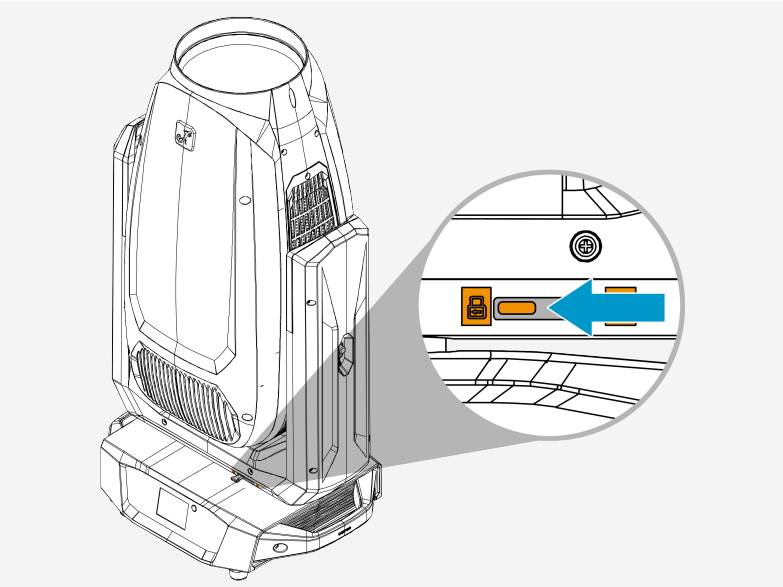

1. Disconnect the power supply.
   ⇨ The fixture is powered off.
2. Rotate the head until it aligns with the pan-lock position on the base.
3. Slide the Pan Lock mechanism to the locked position.

8 INSTALLATION

8.1 OMEGA BRACKET MOUNTING MECHANISM OVERVIEW



1 **Mounting bolt lever**

2 **Mounting bolt**

3 **Protrusion**

8.2 ATTACHING OMEGA BRACKETS

WARNING

Falling object

Risk of serious injury

a. Observe all regional safety regulations concerning overhead loads.
b. Make sure that the device is securely mounted.
c. Make sure that the mounting accessory supports the weight of the device.
d. Before any assembly, check that all mounting bracket components are complete, undamaged and work correctly.

CAUTION

Pinching Hazard

Risk of Injury

a. Be cautious while attaching the brackets. Handle with care to avoid injury.

NOTICE

Pan Lock or Tilt Lock unlocked during installation

Risk of damage to the device

a. Keep Pan Lock and Tilt Lock locked until the device is installed in its final position.

✓ Pan Lock and Tilt Lock are activated.

✓ The device is powered off.

1 Place the device on its side.

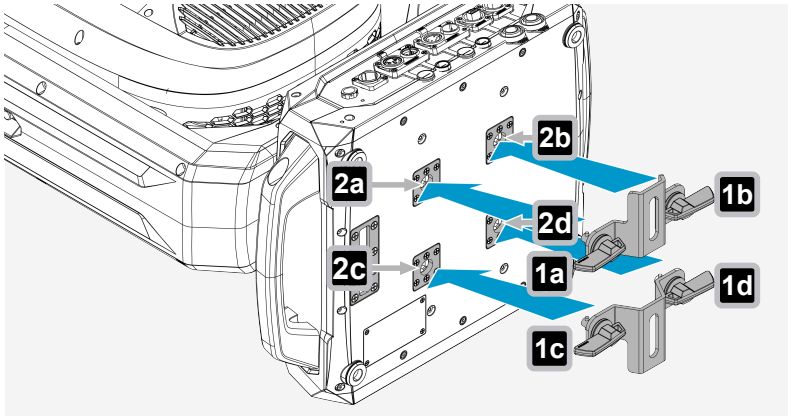

2 Align the mounting bolts **1** of the omega bracket with 2 mounting points **2** on bottom of the device.

ⓘ Make sure that the protrusions on the bolts **1** fit into the recesses of the mounting points **2**.

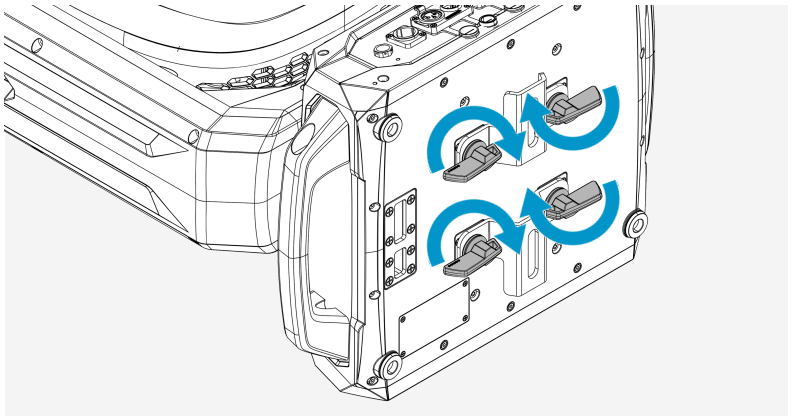

3 Turn the mounting bolt lever clockwise until it is tight.

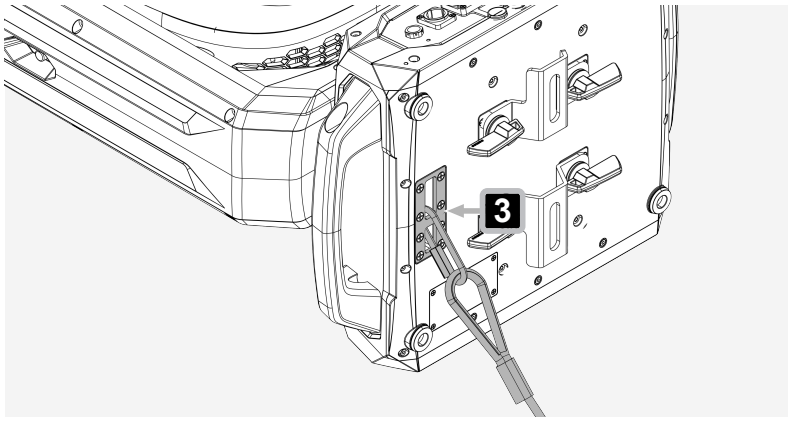

Attach the safety cable to the securing lug **3**.

ⓘ Suitable truss clamps are sold separately.

9 OPERATION

9.1 POWER SUPPLY

9.1.1 CONNECTING A MAINS POWER CABLE

WARNING

Mains voltage

Risk of electric shock

a. Do not use kinked or damaged mains power cables.

NOTICE

Damage to the Device

a. Make sure that the voltage of the mains power socket matches the device operating voltage.

b. Use only supplied power cables or original Neutrik powerCON® TRUE1 cables. Otherwise you must not plug or unplug the device under load.

1 Plug the device power connector into the device. Make sure the bayonet connector is positioned correctly.

2 Turn the bayonet connector clockwise to lock it.

3 Plug the mains power connector into the mains power socket.

9.1.2 DISCONNECTING A MAINS POWER CABLE

NOTICE

Damage to the Device

a. Make sure that the voltage of the mains power socket matches the device operating voltage.

b. Use only supplied power cables or original Neutrik powerCON® TRUE1 cables. Otherwise you must not plug or unplug the device under load.

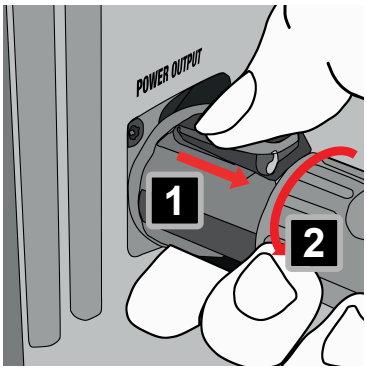

1 Disconnect the mains power connector of the mains power cable from the mains power socket.

2 Pull the locking lever of the bayonet connector backwards and hold it. 1

3 Turn the bayonet connector anticlockwise. 2

4 Pull the bayonet connector out of the socket.

9.2 DEVICE NAVIGATION

9.2.1 USING THE CONTROL PANEL

NOTICE

Control panel dirty or damp
Functionality impaired
a. Make sure that the control panel is dry and clean.
b. After configuring the device, activate the **Autolock** function in the settings.

OPERATION WITH ACTIVATED AUTOLOCK FUNCTION

Tap and hold ▲ and ▼ simultaneously for approximately 5 seconds to operate the device.

1 Tap **MENU** to access the main menu.
2 Tap ▲ or ▼ to navigate through the menu items.
3 Tap **ENTER** to access a submenu or to change the value of a menu item.
4 Tap ▲ or ▼ to change the value of a menu item.
5 Tap **MENU** to return to the next higher menu layer or the main display.

The selected menu item appears as the header of the new view, as shown in this example.

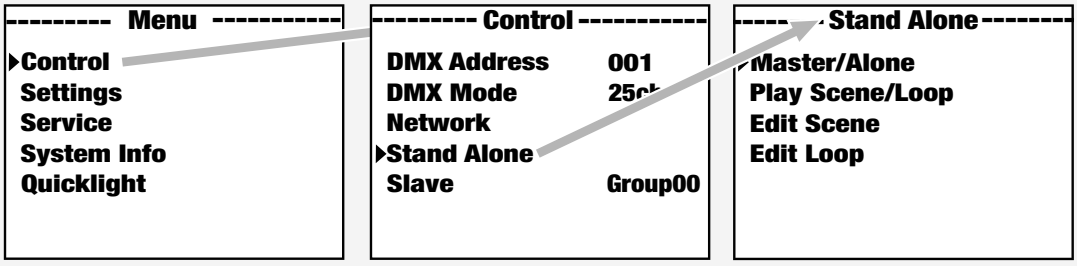

9.2.2 ACTIVATING / DEACTIVATING AUTOLOCK

The **Autolock** function prevents malfunctions caused by moisture or dirt on the control panel. Find below instructions for activating the **Autolock** function.

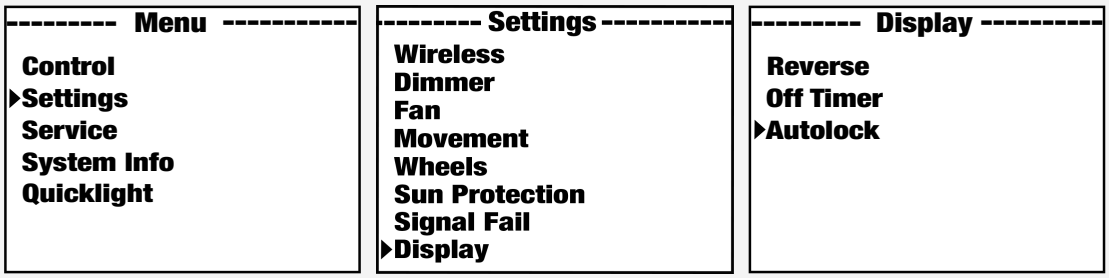

1 In the main menu, choose **Settings**>**Display**>**Autolock**.
2 Use the control panel to adjust the settings.
   a) Choose **On after 60s** to automatically lock the controls if there is no input for 60 seconds.
   b) Choose **Off** to deactivate the **Autolock** function.
3 Tap **ENTER** to confirm.

9.2.3 USING THE BATTERY-POWERED DISPLAY

The device has a battery-powered display. The battery-powered display allows to access and change settings without a power supply.

> When using the battery-powered display, all external device controls are deactivated. The main display indicates that there is no control signal.

1 Tap and hold **MENU** for approximately 10 seconds.
   ⇨ The display turns on.
2 Make the required settings.

9.3 DEVICE CONFIGURATION

9.3.1 SETTING THE DMX START ADDRESS

⚠ **WARNING!** Risk of eye damage. As soon as the DMX start address is entered, the device may immediately activate if a DMX signal is present and may cause glare.

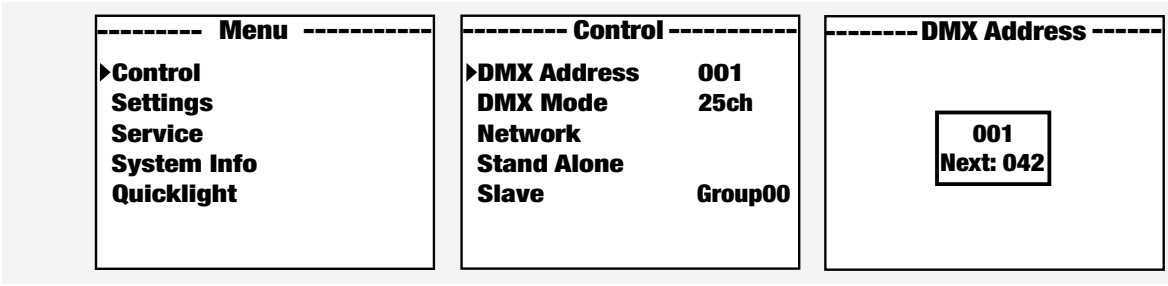

1 In the main menu, choose **Control**>**DMX Address**.
2 Use the control panel to adjust the desired DMX start address.
3 Tap **ENTER** to confirm.

9.3.2 SETTING THE DMX MODE

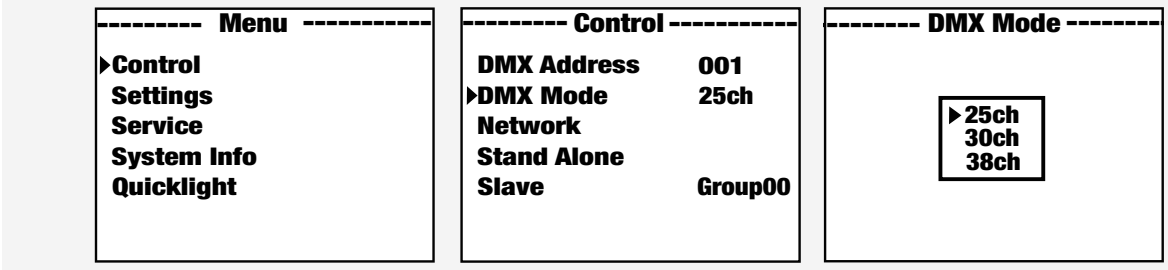

1 In the main menu, choose **Control**>**DMX Mode**.
2 Use the control panel to adjust the settings.
3 Tap **ENTER** to confirm.

> Find DMX tables with the channel assignments in the DMX CONTROL section of this user manual.

9.3.3 SETTING THE NETWORK

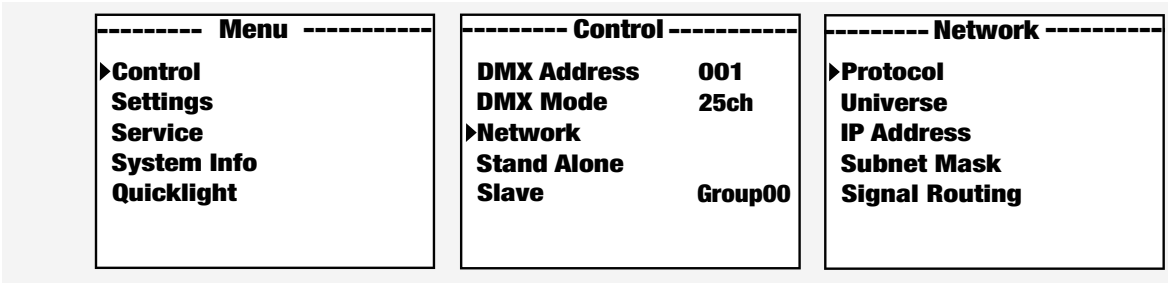

1 In the main menu, choose **Control**>**Network**.
2 Use the control panel to adjust the settings.
3 Tap **ENTER** to confirm.

9.3.4 SETTING THE IP ADDRESS

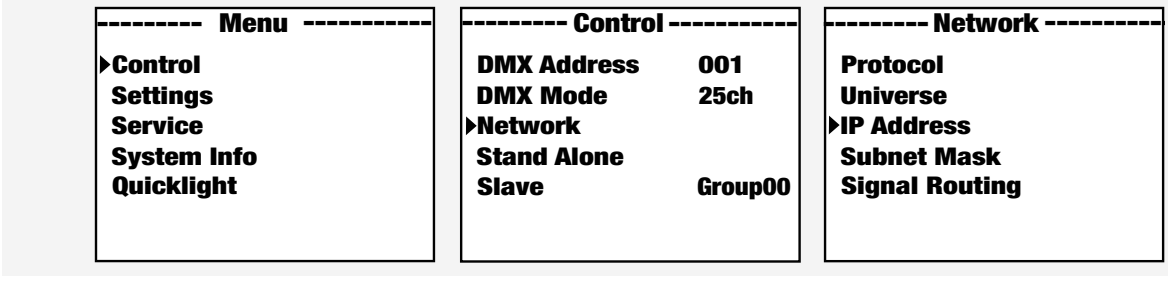

1 In the main menu, choose **Control**>**Network**>**IP Address**.
2 Use the control panel to adjust the settings block by block from left to right.
   a) Enter the values for each block.
   b) Tap confirm to move to the next block.
3 Tap **ENTER** to confirm.

9.3.5 SETTING THE SUBNET MASK

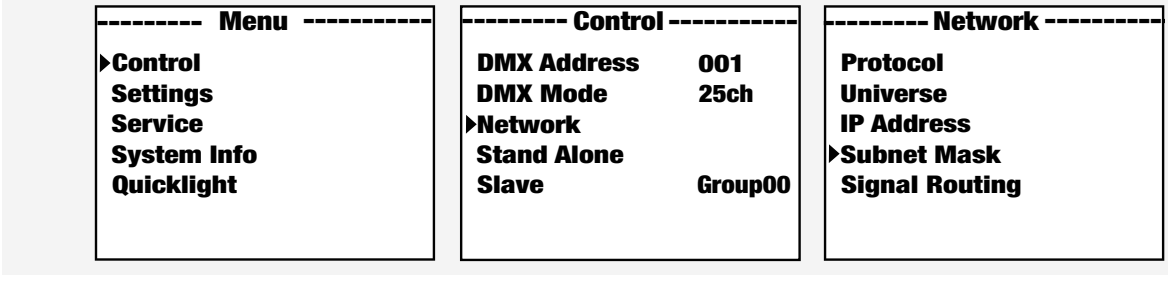

1 In the main menu, choose **Control**>**Network**>**Subnet Mask**.
2 Use the control panel to adjust the settings block by block from left to right.
   a) Enter the values for each block.
   b) Tap confirm to move to the next block.
3 Tap **ENTER** to confirm.

9.3.6 SETTING THE STAND-ALONE MODE

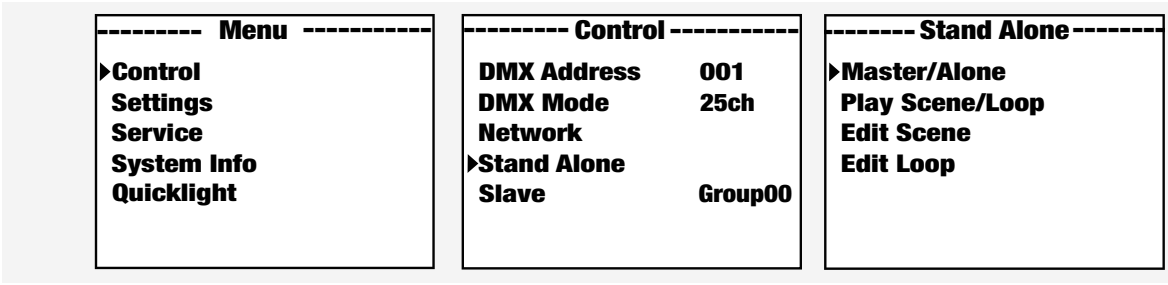

1 In the main menu, choose **Control**>**Stand Alone**.
2 Use the control panel to adjust the settings.
   a) Choose **Master/Alone**>**Master** to output the control signal to slave fixtures via XLR.
   b) Choose **Master/Alone**>**Alone** to deactivate the control signal output.
   c) Choose **Play Scene/Loop**>**Play Scene** to activate one of the eight available scenes (Scene 1–8).
   d) Choose **Play Scene/Loop**>**Play Loop** to activate one of the eight available scenes (Scene 1–8).
   e) Choose **Edit Scene** to customise a pre-programmed scene.
   f) Choose **Edit Loop** to customise a pre-programmed loop.
3 Tap **ENTER** to confirm.

9.3.7 SETTING THE SLAVE MODE

✓ You have activated the control signal output in the master unit by navigating to: **Control**>**Stand Alone**>**Master/Alone**>**Master**.

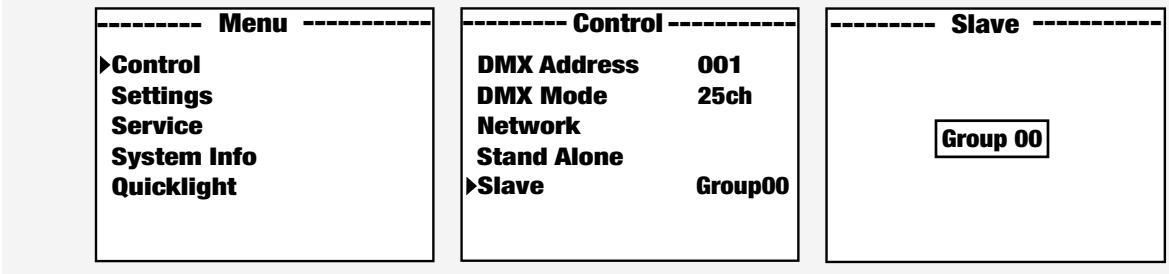

1 In the main menu, choose **Control**>**Slave**.
2 Tap **ENTER** to confirm.

9.3.8 EXTENDED SLAVE MODE

9.3.8.1 SETUP FOR A RUNNING LIGHT EFFECT



9.3.8.2 SETUP FOR A RUNNING LIGHT EFFECT WITH MASTER AND FIRST SLAVE IN SYNC



9.3.9 PAIRING A WIRELESS DMX RECEIVER WITH A TRANSMITTER

✓ The transmitter and the receiver are located within the same wireless operating range.

1 In the receiver's menu, select **Settings**>**Wireless**>**Operation mode**>**Receive**.
2 In the receiver's menu, select **Settings**>**Wireless**>**Linking**>**Receive Reset**.
⇨ The receiver is now ready to pair and waiting for a pairing request.
3 In the transmitter's menu, select **Settings**>**Wireless**>**Operation mode**>**Transmit CRMX/G4/G3**.
4 In the transmitter`s menu select **Settings**>**Wireless**>**Linking**>**Link**.
⇨ The receiver and transmitter will pair automatically.
⇨ The wireless DMX link between fixtures remains active until it is manually disconnected.

ⓘ Repeat steps 1 and 2 for each receiver you want to connect to a single transmitter.

9.3.10 ABOUT LINKING KEY

A **Linking Key** is an eight-digit numerical code used to pair wireless DMX transmitters and receivers in lighting fixtures. The key always consists of exactly eight characters, and all eight positions must be filled. Each position can contain any digit from 0 to 9.

9.3.11 PAIRING A WIRELESS DMX RECEIVER WITH A TRANSMITTER VIA LINKING KEY

✓ The transmitter and the receiver are located within the same wireless operating range.

1 In the receiver's menu, select **Settings**>**Wireless**>**Operation mode**>**Receive**.
2 In the receiver's menu, select **Settings**>**Wireless**>**Linking**>**Linking Key**.
3 Enter the user-defined `Linking Key`.

ⓘ The same key must be set on both the transmitter and the receiver.

4 In the transmitter's menu, select **Settings**>**Wireless**>**Operation mode**>**Transmit CRMX/G4/G3**.
5 In the transmitter`s menu select **Settings**>**Wireless**>**Linking Key**.
6 Enter the same `Linking Key` as on the receiver.
⇨ The receiver and transmitter will pair automatically once both devices share the same **Linking Key**.
⇨ The wireless DMX link between fixtures remains active until it is manually disconnected.

ⓘ Repeat the process for each receiver to pair several receivers to one transmitter (such as for master/slave operation).

9.3.12 UNLINKING A WIRELESS DMX RECEIVER FROM A TRANSMITTER

There are two ways to disconnect the wireless DMX link:

UNLINK FROM THE RECEIVER

1 On the device configured as the receiver, select **Reset** to remove the existing pairing.
⇨ The receiver is now unlinked and ready for a new pairing if needed.

UNLINK FROM THE TRANSMITTER

2 On the device configured as the transmitter, select **Unlink** to disconnect all paired receivers from the transmitter.

ⓘ After performing either option, the wireless DMX connection is fully disconnected. The devices will not reconnect automatically unless paired again.

9.3.13 CONFIGURING QUICKLIGHT

Create a static lighting scene directly on the device without using an external controller or DMX console. By defining these basic settings, the device will maintain the configured position and light output.

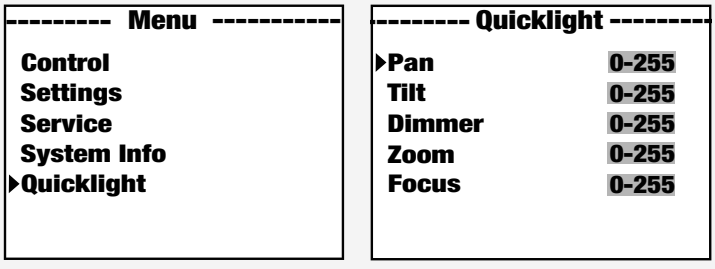

1 In the main menu, choose **Quicklight**.

2 Use the control panel to adjust the settings:

a) **Pan**: Choose a value between 0 and 255 to set the horizontal angle of the head (0 = lowest position, 255 = highest position).

b) **Tilt**: Choose a value between 0 and 255 to set the vertical angle of the head (0 = lowest position, 255 = highest position).

c) **Dimmer**: Choose a value between 0 and 255 to set the light intensity (0 = off, 255 = maximum brightness).

d) **Zoom**: (Beam size) Choose a value between 0 and 255 to adjust the beam angle (0 = narrow beam, 255 = wide beam).

e) **Focus**: Choose a value between 0 and 255 to adjust the focus (0 = softest focus, 255 = sharpest focus).

3 Tap **ENTER** to confirm.

9.4 MAIN SCREEN OVERVIEW

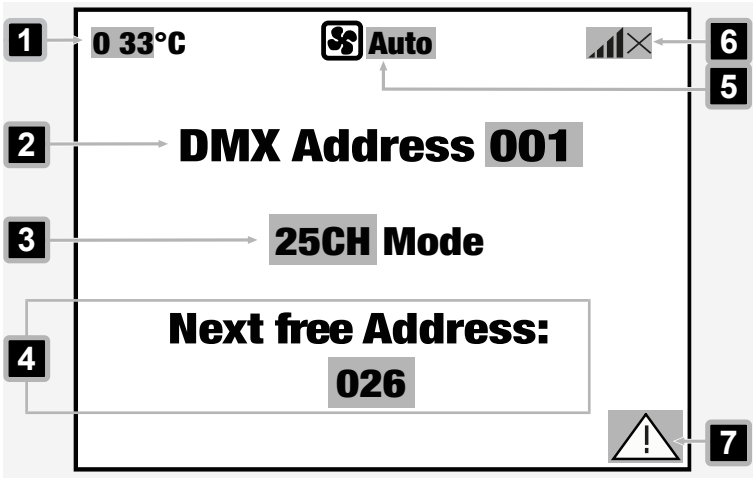

1 **°C** - Indicates the illuminant temperature in °C.

2 **DMX Address** - Indicates the set DMX start address.

3 **Mode** - Indicates the set DMX mode (**25CH**, **30CH**, **38CH**).

4 **Next free address:** - Indicates the channel offset to the next available DMX start address, based on the selected channel mode.

5 **W-DMX settings** - Indicates the status of the wireless DMX connection. (?↓ , ↯↓ , ×↓ , ↓ , ↑ , ×)

6 - Displays the selected fan mode (**Auto**, **Off**, **Constant Low**, **Constant Mid**, **Constant High**)

7 ⚠ - Indicates an error in one or more device component(s). Find details on current errors under **Info>Error** Info.

9.5 SUBMENUS

9.5.1 ABOUT THE SUBMENUS

Find detailed explanations of all submenu layers in the submenu visual guide. Each section begins with a graphic showing its exact position within the menu structure, followed by tables listing the available submenu items.

- *Functional descriptions of the menu items are shown in italics* **1** .
  (This applies to the final selectable menu item in each layer.)
- Factory settings are highlighted in **bold** **2** .

Example:

Layer 3	Layer 4	Function Description
State	On	*Activates the wireless module* **1**
	Off **2**	*Deactivates the wireless module* **1**

9.5.2 CONTROL MENU

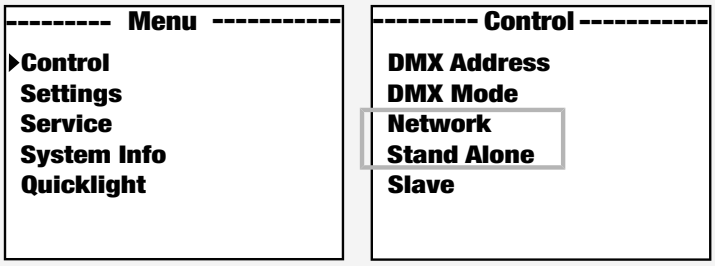

9.5.2.1 NETWORK ART-NET SUBMENU LAYERS

Layer 3	Layer 4	Layer 5 */ Function Description*	
Protocol	Artnet	*Control via* Art-Net	
	sACN	*Control via* sACN	
Universe	Absolute Univ.	*Sets the absolute* Art-Net *universe*	*Depends on net, subnet, and universe*
	Net	*Sets the* Art-Net *network*	*Depends on absolute universe*
	Subnet	*Sets the* Art-Net *subnet*	
	Universe	*Sets the* Art-Net *universe*	
IP Address	xxx.xxx.xxx.xxx	*Sets the IP address*	
Subnet Mask	xxx.xxx.xxx.xxx	*Sets the subnet mask*	

Layer 3	Layer 4	Layer 5 */ Function Description*
Signal Routing	**Send to XLR**	*Relays the control signal to* XLR Out
	Backup by XLR	*Controls via* XLR *with network signal interruption*
	Receive only	*No connection between the network signal and* XLR *connectors*

9.5.2.2 NETWORK SACN SUBMENU LAYERS

Layer 3	Layer 4	Layer 5 */ Function Description*
Protocol	Artnet	*Control via* Art-Net
	sACN	*Control via* sACN
Universe	Absolute Univ.	*Sets the* sACN *universe*
IP Address	xxx.xxx.xxx.xxx	*Sets the IP address*
Subnet Mask	xxx.xxx.xxx.xxx	*Sets the subnet mask*
Signal Routing	**Send to XLR**	*Relays the control signal to* XLR Out
	Backup by XLR	*Controls via* XLR *with network signal interruption*
	Receive only	*No connection between the network signal and* XLR *connectors*

9.5.2.3 STAND-ALONE SUBMENU LAYERS

Layer 3	Layer 4	Layer 5 / Layer 6 / *Function Description*		
Master/Alone	Master	*Relays the control signal via* DMX OUT		
	Alone	*Does not relay the control signal*		
Play Scene/Loop	Scene	Scene 1 … 8	*Selects and activates the desired scene*	
	Loop	Loop 1 … 8	*Selects and activates the desired loop*	
Edit Scene	Scene 1 … 8	Pan	*Sets each scene individually. Scenes are activated by selecting them.*	
		Tilt		
		Dimmer		
		...		
Edit Loop	Loop 1 … 8	Step	1 … 8	*Selects step 1 … 8*
		t-Step	0s … 20min	*Sets the step time*
		t-Fade	0s … 20min	*Sets the fade time*
		User Color/Scene	1 … 8	*Selects scene 1 … 8*

9.5.3 SETTINGS MENU

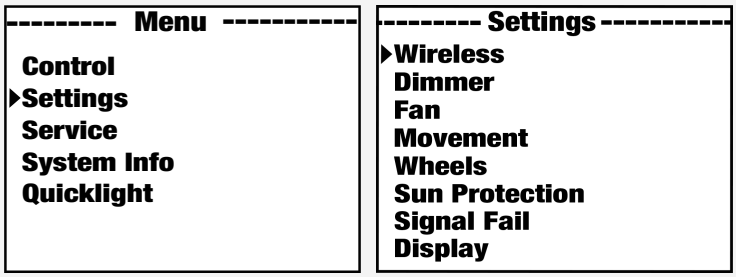

9.5.3.1 WIRELESS SUBMENU LAYERS

Layer 3	Layer 4	Layer 5 / *Function Description*	
State	On	*Activates the wireless module*	
	Off	*Deactivates the wireless module*	
Operation Mode	**Receive**	*Wireless module = receiver*	
	Transmit CRMX	*Wireless module = transmitter with* CRMX *transmitter standard*	
	Transmit G4s	*Wireless module = transmitter with* G4s *transmitter standard*	
	Transmit G3	*Wireless module = transmitter with* G3 *transmitter standard*	
Linking	Mode Receive: Receive Reset	*Resets the receiver and puts it in pairing standby mode*	
	Mode Transmit: Link	*Pairs with compatible, ready-to-pair wireless devices*	
	Mode Transmit: Unlink	*Disconnects wireless* DMX *connections and places in pairing standby mode*	
Linking Key	Linking Key	*Sets the connection key*	
	CRMX Mode (only available with operation mode = Receive)	**CRMX**	*Receiver standard* = CRMX
		CRMX2	*Receiver standard* = CRMX2
	CRMX Universe (only available with operation mode = Receive)	**A** … H	*Selects* CRMX *universe A to H*
Universe Metadata	RGB Color Code	Red Orange Yellow Green Cyan	RGB *code for colour display of the universe*

Layer 3	Layer 4	Layer 5 / *Function Description*	
		Blue Purple White	
	Universe Name	*A 16-character string with a customisable name that identifies the universe*	

9.5.3.2 DIMMER SUBMENU LAYERS

Layer 3	Layer 4	*Function Description*
Curve (Dimmer Curve)	**Linear**	*Light intensity increases linearly with* DMX *value*
	Exponential	*Adjusts the light intensity finely at lower* DMX *values and broadly at higher* DMX *values*
	Logarithmic	*Adjusts the light intensity broadly at lower* DMX *values and finely at higher* DMX *values*
	S-Curve	*Adjusts the light intensity finely at lower and higher* DMX *values and broadly at medium* DMX *values*
	Halogen	*Tungsten dimmer curve*
PMW Frequency	650Hz **1530Hz** 3600Hz 12kHz 18.9kHz 25kHz	*Selects the* LED PWM *frequency*
Response	**LED**	*The device responds immediately to changes of the* DMX *value*
	Halogen 1kW	*The light behaves in a similar way to a halogen light with gradual changes of brightness*
	Halogen 2kW	
	Halogen 5kW	

9.5.3.3 FAN SUBMENU LAYERS

Layer 3	*Function Description*
Auto	*Automatic fan control (controls fans by dimmer value and the device temperature)*
Off	*Deactivates the fans*
Constant Low	*Constant low fan speed with reduced brightness, if necessary*
Constant Mid	*Constant average fan speed with reduced brightness, if necessary*
Constant High	*Constant high fan speed*

9.5.3.4 MOVEMENT SUBMENU LAYERS

Layer 3	Layer 4	*Function Description*
Pan Reverse	On	*Reverses the pan direction*
	Off	*Keeps the pan direction*
Tilt Reverse	On	*Reverses the tilt direction*
	Off	*Keeps the tilt direction*
Pan Angle	**540°**	*Sets the maximum pan angle to 540°*
	630°	*Sets the maximum pan angle to 630°*
Position Feedback	**On**	*Enables automatic position correction*
	Off	*Disables automatic position correction*
Move in Black	On	*Blackout during head movement*
	Off	*No blackout during head movement*
Silent Movement	On	*Slowed motor movements for quieter operation*
	Off	*Disables the function*
Motor Reset	**Fast**	*Performs the reset procedure using a reduced movement range in combination with calibration values. Enables faster and more precise resetting movements.*
	Normal	*Performs the reset procedure over the entire movement range*

9.5.3.5 WHEELS SUBMENU LAYERS

Layer 3	Layer 4	Layer 5 / *Function Description*	
Gobo Wheel	Position	Clockwise	*Gobo wheel rotation direction is always clockwise*
		Shortest Way	*Gobo wheel rotates the shortest way to new position*
	Movement	**Snap**	*Gobo wheel moves directly to centred gobo position*
		Scroll	*Gobo wheel rotates continuously*
	Color Correction	**On**	*Compensates colour drift when using gobos (must be defined individually for each fixture)*
		Off	*No compensation of colour drift when using gobos*
Colour Wheel	Position	Clockwise	*Colour wheel rotation direction is always clockwise*
		Shortest Way	*Colour wheel rotates the shortest way to new position*

Layer 3	Layer 4	Layer 5 / *Function Description*	
	Movement	Snap	*Colour wheel moves directly to centred gobo position*
		Scroll	*Colour wheel is rotated continuously*
Move in Black	On	*Enables a blackout during gobo and colour wheel movements to hide visible transitions*	
	Off	*Allows wheel movements to remain visible without triggering a blackout*	

9.5.3.6 SUN PROTECTION SUBMENU LAYERS

Layer 3	*Function Description*
On	*Activates blackout and directs the moving heads downward*
Off	*Disables the function*

9.5.3.7 SIGNAL FAIL SUBMENU LAYERS

Layer 3	*Function Description*
Hold	*Retains the last command if signal is lost*
Sun Protection	*Activates sun protection if signal is lost*
Blackout	*Activates blackout if signal is lost*
Fade to Black (10s)	*10-second fade to blackout if signal is lost*
Last Stand Alone	*Activates the last selected stand-alone operation mode if signal is lost*
Full	*Switches to full output if signal is lost*

9.5.3.8 DISPLAY SUBMENU LAYERS

Layer 3	Layer 4	*Function Description*
Reverse	On	*180° display rotation (for example, for overhead installation)*
	Off (if Auto is not available)	*No display rotation*
	Auto	*Automatic position detection (upright/ overhead mounting)*
Off Timer	Always On	*Permanently on*
	Off after 20s	*Deactivates after approximately 20 seconds of inactivity*
Autolock	On after 60s	*Controls locked after approximately 60 seconds without input (*LOCKED*). Unlock: Tap ▲ and ▼ simultaneously for approximately 5 seconds.*
	Off	*Deactivates* Autolock

9.5.4 SERVICE MENU

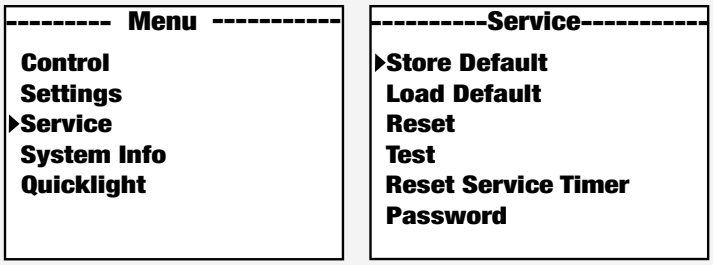

9.5.4.1 SERVICE FUNCTION SUBMENU LAYERS

Layer 2	Layer 3	Layer 4	Layer 5 / *Function Description*	
Store Default	User A		*Saves all current settings as user preset A*	
	User B		*Saves all current settings as user preset B*	
	User C		*Saves all current settings as user preset C*	
Load Default	Factory		*Resets to factory setting*	
	User A		*Resets to user A values*	
	User B		*Resets to user B values*	
	User C		*Resets to user C values*	
Reset	Pan/Tilt		*Resets pan/tilt motors*	
	Head		*Resets motors in the device head*	
	CMY/CW		*Resets CMY and colour wheel motors*	
	Gobo/Animation		*Resets gobo wheel and animation wheel*	
	Zoom/Focus		*Resets zoom and focus motors*	
	Prism/Frost		*Resets prism and frost motors*	
	All		*Resets all motors*	
Test	Test Sequence		*Pre-programmed sequence to test all components*	
	Stress Test		*Pre-programmed sequence to test all components under maximum load*	
	Motor Test		Pan	*Activates all motors individually with values of 000 to 255*
			Tilt	
			...	
Reset Service Timer	No		*Does not reset the service operation time*	
	Yes	Reset Now	*Resets the service operating time*	
Password	*For service purposes only.*			

9.5.5 SYSTEM INFO MENU

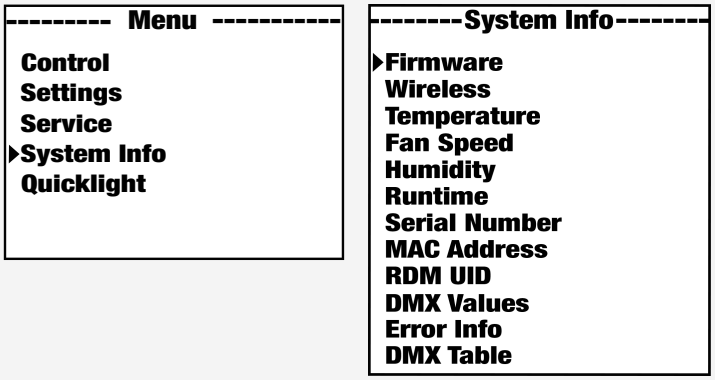

9.5.5.1 SYSTEM INFO SUBMENU LAYERS

Layer 2	Layer 3 / Layer 4 / *Function Description*			
Firmware	DISP	vx.x.x	*Displays the firmware version of the corresponding component*	
	NET	vx.x.x		
	DRV	vx.x.x		
	...			
Wireless	Module		*Displays the wireless module model*	
	Device Name		*Displays the device name*	
	Version		Hardware	*Hardware version number*
			Software	*Software version number*
	Link Quality		%	*Connection quality in per cent*
	Status		Operational	*Status information*
			DMX Data	
			RDM Identify	
			RF Link	
			Link State	
Temperature	LED		xxx° C / ° F	*Displays the temperature of the corresponding component*
	Base		xxx° C / ° F	
	...			
	Temperature Unit		**° C**	*Sets the temperature unit*
			° F	
Fan Speed	Fan X		*Displays the speed of the corresponding fans*	
	Fan Y			
	...			
Humidity	Head		x %	*Displays the relative humidity in per cent*
	Base		X %	

Layer 2	**Layer 3 / Layer 4 /** ***Function Description***		
Runtime	Total	xxxx h : xx m	*Total operating time*
	Operation	xxxx h : xx m	*Time in use*
	LED	xxxx h : xx m	*Lamp operating time*
	Service	xxxx h : xx m	*Operating time after resetting the service operating time*
Serial Number	*Displays the device serial number*		
MAC Address	xx:xx:xx:xx:xx:xx	*MAC address*	
RDM UID	RDM Unique Identifier		
DMX Values	*Displays the* DMX *values present*		
Error Info	*Displays an error in case of malfunction*		
DMX Table	*Displays* DMX *mode tables*		

10 FIRMWARE UPDATE



Update your device firmware using a dedicated update setup.

The update process requires:

- CLIREMOTE

The device includes detailed instructions and the required cable for performing the software update.

Further information and ordering options are available here: *UNICON® - Remote control for DMX fixtures*

11 MAINTENANCE

11.1 PRODUCT MAINTENANCE



CAUTION

Mains Voltage

Risk of electric shock

a. Before you perform maintenance work on the device, disconnect the device from all poles.



NOTICE

Damage to the device and void of warranty

a. Do not use cleaning agents, disinfectants, alcohol, or agents with abrasive effect for cleaning.

Carry out the maintenance measures listed below on a regular basis. The frequency of cleaning depends on the environment in which you use the product. Damp or dirty environments may cause increased soiling and wear.

VISUAL INSPECTION

Check the following points before operating the device.

- ⚠ **WARNING! Risk of electric shock.** Check mains power cables for damage or material fatigue.
- Check all air inlets and outlets for damage, dust, or dirt deposits.
- Check all outside screws and covers for corrosion, damage or excessive wear.
- Check all connectors and rubber sealing caps for damage, dust, or dirt deposits.
- ⚠ **WARNING! Risk of falling objects.** Check that all screws, fasteners, and rigging points are securely tightened.

CLEANING

- Clean the surface with a clean and damp lint-free cotton cloth. Wipe off all excess moisture.
- **NOTICE! Do not use compressed air.** Clean any air inlets and outlets of dust and dirt deposits with a clean and damp lint-free cotton cloth.
- Clean all plug contacts from dust and dirt with a dry lint-free cotton cloth.
- Clean the front glass of your Cameo Lighting device on a monthly basis with a clean and damp lint-free cotton cloth dampened with a 1:1 solution of water and mild detergent. Do not use alcohol, solvents or abrasives.

REPLACING GOBOS

⚠ **CAUTION! Gobos may only be replaced by skilled service personnel.**

11.2 STORING THE DEVICE

Store the device only in a dry and clean environment. If you are storing the individual components of the device, use special protective covers, bags, and cases. Find such accessories for your product in the Adam Hall Shop (https://www.adamhall.com/shop).

12 REPAIR



CAUTION

Do not repair the device.

a. Repairs may only be carried out by specialist personnel authorised by the manufacturer.
b. If your device is damaged or requires service, contact the Adam Hall Customer Service.

13 DISPOSAL

13.1 PACKAGING DISPOSAL



1. You can feed the packaging into the reusable material cycle using the usual disposal methods.
2. Separate the packaging in accordance with the applicable disposal laws and recycling regulations in your country

13.2 DEVICE DISPOSAL



1. This device is subject to the European Directive on Waste Electrical and Electronic Equipment, as amended. WEEE Directive Waste Electrical and Electronic Equipment. Old appliances do not belong in the household waste. The old device must be disposed of via an approved disposal company or a municipal disposal facility. Observe the applicable regulations in your country.
2. Observe all disposal laws applicable in your country.
3. As a private customer, you can obtain information on environmentally friendly disposal options from the seller of the product or the appropriate regional authorities.
4. Retailers are often legally obliged to take back items free of charge.
5. Old appliances that contain harmful substances are labelled with the symbol of a crossed-out dustbin.
6. Current information on the collection rate can be found at the following website: *https://environment.ec.europa.eu/*. Search for the following term: waste-electrical-and-electronic-equipment-weee.

OPUS® H6IP

IP65 Hybrid Moving Head
DMX CONTROL TABLE



NOTICE

EN: After the adjustments have been made, set the value to 000 to avoid disturbance by endless function call.

DE: Nachdem die Einstellungen vorgenommen wurden, stellen Sie den Wert auf 000 ein, um Störungen durch endlosen Funktionsaufruf zu vermeiden.

FR: Une fois les ajustements effectués, réglez la valeur sur 000 pour éviter les perturbations par appel de fonction sans fin.

ES: Después de realizar los ajustes, establezca el valor en 000 para evitar perturbaciones mediante una llamada de función sin fin.

PL: Po dokonaniu ustawień ustaw wartość na 000, aby uniknąć zakłóceń przez niekończące się wywołanie funkcji.

IT: Dopo aver effettuato le regolazioni, impostare il valore su 000 per evitare disturbi causati da una chiamata a funzione infinita.

25CH Basic	30CH Standard	38CH Extended			
Channel	**Channel**	**Channel**	**Function**	**Values**	
1	1	1	Pan	000 - 255	0 % ... 100 %
2	2	2	Pan fine	000 - 255	
3	3	3	Infinite Pan	000 - 041	No function
				042 - 082	Pan range 0 ... 360
				083 - 168	Pan rotation fast to slow
				169 - 169	Pan rotation stop
				170 - 255	Pan rotation slow to fast (backwards)
4	4	4	Tilt	000 - 255	0 % ... 100 %
5	5	5	Tilt fine	000 - 255	
6	6	6	Dimmer	000 - 255	0 % ... 100 %
	7	7	Dimmer fine	000 - 255	
7	8	8	Strobe Functions	000 - 005	Open
				006 - 010	Closed
				011 - 022	Ramp up/down slow to fast
				023 - 033	Ramp up/down random slow to fast
				034 - 045	Ramp up slow to fast
				046 - 056	Ramp up random slow to fast
				057 - 068	Ramp down slow to fast
				069 - 079	Ramp down random slow to fast
				080 - 102	Random strobe effect slow to fast
				103 - 127	Strobe break effect 5 s ... 1 s (short burst with break)
				128 - 250	Strobe slow to fast (< 1 Hz ... 20 Hz)
				251 - 255	Open
				000 - 005	All segments on
				006 - 128	Fade sparkle FX in 0 ... 100 %

OPUS® H6IP

IP65 Hybrid Moving Head
DMX CONTROL TABLE

		9	LED-segment Dim	129	-	137	Only LED segment 1 on
				138	-	146	Only LED segment 2 on
				147	-	155	Only LED segment 3 on
				156	-	164	Only LED segment 4 on
				165	-	173	Only LED segment 1 & 2 on
				174	-	182	Only LED segment 2 & 3 on
				183	-	191	Only LED segment 3 & 4 on
				192	-	200	Only LED segment 1 & 4 on
				201	-	209	Only LED segment 1 & 3 on
				210	-	218	Only LED segment 2 & 4 on
				219	-	227	Only LED segment 1. 2 & 3 on
				228	-	236	Only LED segment 2. 3 & 4 on
				237	-	245	Only LED segment 1. 3 & 4 on
				246	-	255	Only LED segment 1. 2 & 4 on
		10	Sparkle FX	000	-	005	No function
				006	-	036	Chaser 1 jump (slow to fast)
				037	-	067	Chaser 2 jump (slow to fast)
				068	-	098	Chaser 3 jump (slow to fast)
				099	-	129	Chaser 4 jump (slow to fast)
				130	-	160	Chaser 1 fade (slow to fast)
				161	-	191	Chaser 2 fade (slow to fast)
				192	-	222	Chaser 3 fade (slow to fast)
				223	-	255	Chaser 4 fade (slow to fast)
8	9	11	Cyan	000	-	255	0 % ... 100 %
		12	Cyan fine	000	-	255	
9	10	13	Magenta	000	-	255	0 % ... 100 %
		14	Magenta fine	000	-	255	
10	11	15	Yellow	000	-	255	0 % ... 100 %
		16	Yellow fine	000	-	255	
11	12	17	CTO	000	-	255	0 % ... 100 %
		18	CTO fine	000	-	255	
12	13	19	Colour Wheel	000	-	000	Open
				001	-	020	Open to Deep Red
				021	-	021	Deep Red
				022	-	041	Deep Red to Medium Blue
				042	-	042	Medium Blue
				043	-	062	Medium Blue to Deep Green
				063	-	063	Deep Green
				064	-	083	Deep Green to Pink
				084	-	084	Pink
				085	-	104	Pink to High CRI
				105	-	105	High CRI
				106	-	125	High CRI to Amber
				126	-	126	Amber
				127	-	146	Amber to CTO 3200 K

				147	-	147	CTO 3200 K
				148	-	167	CTO 3200 K to Deep Blue
				168	-	168	Deep Blue
				169	-	188	Deep Blue to open
				189	-	192	Open
				193	-	223	Colour wheel rotation fast to slow
				224	-	224	Colour wheel rotation stop
				225	-	255	Colour wheel rotation slow to fast (backwards)
13	**14**	**20**	Gobo Wheel 1	000	-	005	Open
				006	-	021	Open -> Gobo 1
				022	-	022	Gobo 1
				023	-	038	Gobo 1 -> Gobo 2
				039	-	039	Gobo 2
				040	-	055	Gobo 2 -> Gobo 3
				056	-	056	Gobo 3
				057	-	072	Gobo 3 -> Gobo 4
				073	-	073	Gobo 4
				074	-	089	Gobo 4 -> Gobo 5
				090	-	090	Gobo 5
				091	-	106	Gobo 5 -> Gobo 6
				107	-	107	Gobo 6
				108	-	123	Gobo 6 -> Gobo 7
				124	-	124	Gobo 7
				125	-	140	Gobo 7 -> open
				141	-	142	Open
				143	-	149	Gobo 1 shake (slow -> fast)
				150	-	156	Gobo 2 shake (slow -> fast)
				157	-	163	Gobo 3 shake (slow -> fast)
				164	-	170	Gobo 4 shake (slow -> fast)
				171	-	177	Gobo 5 shake (slow -> fast)
				178	-	184	Gobo 6 shake (slow -> fast)
				185	-	191	Gobo 7 shake (slow -> fast)
				192	-	192	Open
				193	-	223	Gobo wheel rotation fast to slow
				224	-	224	Gobo wheel rotation stop
				225	-	255	Gobo wheel rotation slow to fast (backwards)
14	**15**	**21**	Gobo Wheel 1 Gobo Position	000	-	128	Gobo position 0° ... 540°
				129	-	191	Gobo rotation fast to slow
				192	-	192	Gobo rotation stop
				193	-	255	Gobo rotation slow to fast (backwards)
	16	**22**	Gobo Wheel 1 Gobo Position fine	000	-	255	Gobo position fine
				000	-	005	Open
				006	-	011	Open -> Gobo 1

OPUS® H6IP

IP65 Hybrid Moving Head
DMX CONTROL TABLE

				012	-	012	Gobo 1
				013	-	018	Gobo 1 -> Gobo 2
				019	-	019	Gobo 2
				020	-	025	Gobo 2 -> Gobo 3
				026	-	026	Gobo 3
				027	-	032	Gobo 3 -> Gobo 4
				033	-	033	Gobo 4
				034	-	039	Gobo 4 -> Gobo 5
				040	-	040	Gobo 5
				041	-	046	Gobo 5 -> Gobo 6
				047	-	047	Gobo 6
				048	-	053	Gobo 6 -> Gobo 7
				054	-	054	Gobo 7
				055	-	060	Gobo 7 -> Gobo 8
				061	-	061	Gobo 8
				062	-	067	Gobo 8 -> Gobo 9
				068	-	068	Gobo 9
				069	-	074	Gobo 9 -> Gobo 10
				075	-	075	Gobo 10
				076	-	081	Gobo 10 -> Gobo 11
				082	-	082	Gobo 11
				083	-	088	Gobo 11 -> Gobo 12
15	**17**	**23**	Gobo Wheel 2	089	-	089	Gobo 12
				090	-	095	Gobo 12 -> Gobo 13
				096	-	096	Gobo 13
				097	-	102	Gobo 13 -> Gobo 14
				103	-	103	Gobo 14
				104	-	109	Gobo 14 -> open
				110	-	131	Open
				132	-	135	Gobo 1 shake (slow -> fast)
				136	-	139	Gobo 2 shake (slow -> fast)
				140	-	143	Gobo 3 shake (slow -> fast)
				144	-	147	Gobo 4 shake (slow -> fast)
				148	-	151	Gobo 5 shake (slow -> fast)
				152	-	155	Gobo 6 shake (slow -> fast)
				156	-	159	Gobo 7 shake (slow -> fast)
				160	-	163	Gobo 8 shake (slow -> fast)
				164	-	167	Gobo 9 shake (slow -> fast)
				168	-	171	Gobo 10 shake (slow -> fast)
				172	-	175	Gobo 11 shake (slow -> fast)
				176	-	179	Gobo 12 shake (slow -> fast)
				180	-	183	Gobo 13 shake (slow -> fast)
				184	-	187	Gobo 14 shake (slow -> fast)
				188	-	192	Gobo open
				193	-	223	Gobo wheel rotation fast to slow

OPUS® H6IP

IP65 Hybrid Moving Head

DMX CONTROL TABLE

				224	-	224	Gobo wheel rotation stop
				225	-	255	Gobo wheel rotation slow to fast (backwards)
16	**18**	**24**	Zoom	000	-	255	Narrow to wide
		25	Zoom fine	000	-	255	
17	**19**	**26**	Focus	000	-	255	0 % ... 100 %
	20	**27**	Focus fine	000	-	255	
	21	**28**	Auto Focus	000	-	005	No function
				006	-	036	3 m
				037	-	067	5 m
				068	-	098	10 m
				099	-	129	15 m
				130	-	160	20 m
				161	-	191	30 m
				192	-	222	50 m
				223	-	255	100 m
	22	**29**	Auto Focus Adjust	000	-	255	Auto focus adjustment
18	**23**	**30**	Effect Selection 1	000	-	005	Off
				006	-	128	8 x circular prism
				129	-	255	2 x linear prism
19	**24**	**31**	Effect 1 Rotation	000	-	128	Position 0° ... 540°
				129	-	191	Rotation fast to slow
				192	-	192	Rotation stop
				193	-	255	Rotation slow to fast (backwards)
20	**25**	**32**	Effect Selection 2	000	-	005	Off
				006	-	128	6 x linear prism
				129	-	255	Ovalizer
21	**26**	**33**	Effect 2 Rotation	000	-	128	Position 0° ... 540°
				129	-	191	Rotation fast to slow
				192	-	192	Rotation stop
				193	-	255	Rotation slow to fast (backwards)
22	**27**	**34**	Frost	000	-	000	Off
				001	-	127	Light frost 0 % ... 100 %
				128	-	128	Off
				129	-	255	Heavy frost 0 % ... 100 %
23	**28**	**35**	Animation Wheel	000	-	255	Animation wheel in 0 ... 100 %
24	**29**	**36**	Animation Wheel Rotation	000	-	128	Animation wheel position 0° ... 540°
				129	-	191	Animation wheel rotation fast to slow
				192	-	192	Animation wheel rotation stop
				193	-	255	Animation wheel rotation slow to fast (backwards)
				000	-	005	No function
				006	-	006	No function
				007	-	007	Dimmer curve linear
				008	-	008	Dimmer curve exponential
				009	-	009	Dimmer curve logarithmic

OPUS® H6IP

IP65 Hybrid Moving Head
DMX CONTROL TABLE

010	-	010	Dimmer curve S-curve
011	-	011	Dimmer curve halogen
012	-	016	Spare
017	-	017	No function
018	-	018	PWM 650 Hz
019	-	019	PWM 1530 Hz
020	-	020	PWM 3600 Hz
021	-	021	PWM 12 kHz
022	-	022	PWM 18.9 kHz
023	-	023	PWM 25 kHz
024	-	028	Spare
029	-	029	Dimmer response LED
030	-	030	Halogen 1 kW
031	-	031	Halogen 2 kW
032	-	032	Halogen 5 kW
033	-	037	Spare
038	-	038	No function
039	-	039	No function
040	-	044	Spare
045	-	045	No function
046	-	046	No function
047	-	047	No function
048	-	048	No function
049	-	049	No function
050	-	050	No function
051	-	051	No function
052	-	056	Spare
057	-	057	No function
058	-	058	No function
059	-	059	No function
060	-	060	No function
061	-	061	No function
062	-	066	Spare
067	-	067	No function
068	-	068	No function
069	-	069	No function
070	-	070	No function
071	-	071	No function
072	-	072	No function
073	-	077	Spare
078	-	078	No function
079	-	079	No function
080	-	084	Spare
085	-	085	No function
086	-	086	Fan auto

OPUS® H6IP

IP65 Hybrid Moving Head
DMX CONTROL TABLE

				087	-	087	Fan off
				088	-	088	Fan constant low
				089	-	089	Fan constant mid
				090	-	090	Fan constant high
				091	-	095	Spare
				096	-	096	No function
				097	-	097	Invert pan on
				098	-	098	Invert pan off
				099	-	099	Invert tilt on
				100	-	100	Invert tilt off
				101	-	101	Pan angle 540°
				102	-	102	Pan angle 630°
				103	-	103	Position feedback on
				104	-	104	Position feedback off
				105	-	105	Blackout while P/T moving on
				106	-	106	Blackout while P/T moving off
				107	-	107	Silent movement on
				108	-	108	Silent movement off
				109	-	109	Motor reset fast
				110	-	110	Motor reset normal
				111	-	111	No function
				112	-	112	No function
				113	-	117	Spare
				118	-	118	No function
				119	-	119	Gobo wheel shortest way
				120	-	120	Gobo wheel clockwise
			Device settings	121	-	121	Gobo wheel snap
25	**30**	**37**	(hold value for	122	-	122	Gobo wheel scroll
			3 seconds)	123	-	123	Gobo colour correction on
				124	-	124	Gobo colour correction off
				125	-	129	Spare
				130	-	130	Colour wheel shortest way
				131	-	131	Colour wheel clockwise
				132	-	132	Colour wheel snap
				133	-	133	Colour wheel scroll
				134	-	138	Spare
				139	-	139	Blackout while wheels moving on
				140	-	140	Blackout while wheels moving off
				141	-	141	No function
				142	-	142	No function
				143	-	147	Spare
				148	-	148	No function
				149	-	149	Sun protection on
				150	-	150	Sun protection off
				151	-	151	Sleep mode on

OPUS® H6IP

IP65 Hybrid Moving Head
DMX CONTROL TABLE

152	-	152	Sleep mode off/wake up
153	-	157	Spare
158	-	158	No function
159	-	159	No function
160	-	160	No function
161	-	161	No function
162	-	162	No function
163	-	167	Spare
168	-	168	No function
169	-	169	Display always on
170	-	170	Display off after 20 s
171	-	171	Display lock on
172	-	172	Display lock off
173	-	177	Spare
178	-	178	No function
179	-	179	No function
180	-	180	No function
181	-	181	No function
182	-	182	No function
183	-	187	Spare
188	-	188	No function
189	-	189	No function
190	-	190	No function
191	-	191	No function
192	-	192	No function
193	-	197	Spare
198	-	198	No function
199	-	199	Store user default A
200	-	200	Store user default B
201	-	201	Store user default C
202	-	202	Load factory defaults
203	-	203	Load user default A
204	-	204	Load user default B
205	-	205	Load user default C
206	-	210	Spare
211	-	211	No function
212	-	212	Reset pan / tilt
213	-	213	Reset head
214	-	214	Reset CMY/CW
215	-	215	Reset Gobo/animation
216	-	216	Reset zoom/focus
217	-	217	No function
218	-	218	Reset prism/frost
219	-	219	Reset all
220	-	224	Spare

				225	-	225	No function
				226	-	226	Record user scene 1
				227	-	227	Record user scene 2
				228	-	228	Record user scene 3
				229	-	229	Record user scene 4
				230	-	230	Record user scene 5
				231	-	231	Record user scene 6
				232	-	232	Record user scene 7
				233	-	233	Record user scene 8
				234	-	238	Spare
				239	-	239	No function
				240	-	244	Spare
				245	-	249	Spare
				250	-	254	Spare
				255	-	255	No function
		38	Fan Control	000	-	005	Read from menu
				006	-	011	Auto
				012	-	017	Off
				018	-	023	Constant low
				024	-	029	Constant medium
				030	-	035	Constant high
				036	-	154	Spare - read from menu
				155	-	255	Manual mode from 0 % ... 100 %

INDEX

A

Art-Net 37

C

Cleaning 46
Connecting
  Power supply 28
Customer Service 7

D

Disconnecting power supply 28
DMX
  Start address 30
  Technology 20

M

Mains power cable 28

N

Navigating 29
Network 37

O

Omega bracket 26

P

Power supply 28
powerCON® 28

Q

Quicklight 34

S

Slave mode 32
Stand-alone mode 32
Storing 46
Submenu
  Art-Net 37
  Dimmer 39
  Display 41
  Fan 39
  Movement 40
  Network sACN 37
  Signal fail 41
  Stand-alone 37
  Sun protection 41
  Wireless 38
Sun protection 41

cameo

9007199703913227