USER MANUAL

cameo

Intertek
MASTER/SLAVE
CMY
CIRCULAR PRISM
LED TECHNOLOGY
ARTNET COMPATIBLE
LINEAR CTO
4-SHUTTER FRAMING BLADES
COB CHIP ON BOARD
sACN COMPATIBLE
COLOUR WHEEL
IP65
COLD WHITE
STROBE EFFECT
FOCUS
512 DMX
FLICKER FREE
IRIS
W-DMX™
GDTF FILE
FROST FILTER
RDM
PAN & TILT
GOBO WHEEL
STAND ALONE MODE
ZOOM
LINEAR PRISM



OPUS® X4 PROFILE IP

IP65 1400W LED SPOT PROFILE MOVING HEAD

CLOX4PIP;

en-GB

TABLE OF CONTENTS

1 DOCUMENT VERSION AND REVISIONS 6

2 INTRODUCTION 7

2.1 You Made the Right Choice! 7

2.2 Contacts 7

2.3 Link to the Download Centre 7

2.4 Visualisation Conventions in This User Manual 7

3 PRODUCT COMPLIANCE 9

3.1 Manufacturer's Declaration 9

3.2 Declaration of Conformity 9

4 SAFETY INSTRUCTIONS 11

4.1 Intended Use 11

4.2 Explanation of Safety and Warning Symbols 11

4.3 Structure of Warning Messages 12

4.4 General Safety 12

4.5 Electrical Safety 13

4.6 Physical Safety 13

4.7 Thermal Safety 14

4.8 Wireless Safety 14

4.9 Photobiological Safety 15

4.10 Device Safety 15

5 PRODUCT DESCRIPTION 16

5.1 Product Overview 16

5.2 Technical Data 16

5.3 Optional Accessories 18

5.4 User Interface 18

5.4.1 Front Panel Overview 18

5.4.2 Rear Panel Overview 19

6 GENERAL INFORMATION 20

6.1 About DMX Technology 20

6.1.1 DMX Standard 20

6.1.2 DMX Connection 20

6.1.2.1 Connecting Multiple Fixtures 20

6.1.3 Pin Assignment 20

6.1.4 DMX Terminators 21
6.1.5 DMX Adapters 21
6.2 Explanation of the IP Rating 21
7 PREPARATION 23
7.1 Scope of Delivery 23
7.2 Transport 23
7.2.1 Using the Side Recesses or Base Handles for Transport 23
7.2.2 Unlocking the Tilt Lock 24
7.2.3 Unlocking the Pan Lock 24
7.2.4 Locking the Tilt Lock 25
7.2.5 Locking the Pan Lock 25
8 INSTALLATION 26
8.1 Omega Bracket Mounting Mechanism Overview 26
8.2 Attaching Omega Brackets 26
8.3 Mounting and Positioning the Device for Operation 27
9 OPERATION 29
9.1 Power Supply 29
9.1.1 Turning the Device On or Off 29
9.1.2 Disconnecting a Mains Power Cable 29
9.2 Device Navigation 30
9.2.1 Using the Control Panel 30
9.2.2 Using the Battery-powered Display 30
9.3 Configuring the Device 31
9.3.1 Setting the DMX Start Address 31
9.3.2 Setting the DMX Mode 31
9.3.3 Setting the Network 31
9.3.4 Setting the IP Address 32
9.3.5 Setting the Subnet Mask 32
9.3.6 Setting the Stand-Alone Mode 32
9.3.7 Setting the Slave Mode 33
9.3.8 Extended Slave Mode 33
9.3.8.1 Setup for a Running Light Effect 33
9.3.8.2 Setup for a Running Light Effect with Master and First Slave in Sync 33
9.3.9 Pairing a Wireless DMX Receiver with a Transmitter 34
9.3.10 About Linking Key 34
9.3.11 Pairing a Wireless DMX Receiver with a Transmitter via Linking Key 34

9.3.12 Unlinking a Wireless DMX Receiver from a Transmitter 34
9.3.13 Configuring Quicklight 35
9.3.14 Accessing the Help Menu 36
9.4 Main Screen 36
9.4.1 Wireless DMX Status 36
9.4.2 Main Screen Overview 37
9.5 Submenu 37
9.5.1 About the Submenus 37
9.5.2 Submenu Visual Guide 38
9.5.2.1 Control Submenu 38
9.5.2.1.1 Submenu Information Network Art-Net 38
9.5.2.1.2 Submenu Information Network sACN 39
9.5.2.1.3 Submenu Information Stand-Alone 39
9.5.2.2 Settings Menu 40
9.5.2.2.1 Wireless Settings Information 40
9.5.2.2.2 Display Settings Information 41
9.5.2.2.3 Dimmer Settings Information 41
9.5.2.2.4 Movement Settings Information 42
9.5.2.2.5 Wheels Settings Information 42
9.5.2.2.6 Sun Protection Settings Information 43
9.5.2.2.7 Fan Settings Information 43
9.5.2.2.8 Signal Fail Settings Information 43
9.5.2.2.9 Power Mode Settings Information 44
9.5.2.2.10 Store Default Settings Information 44
9.5.2.3 System Info Menu 44
9.5.2.3.1 Device Information 44
9.5.2.4 Service Menu 46
9.5.2.4.1 Service Function Information 46
10 FIRMWARE UPDATE 47
11 MAINTENANCE 48
11.1 Product Maintenance 48
11.2 Storing the Device 48
12 REPAIR 49
13 DISPOSAL 50
13.1 Packaging Disposal 50
13.2 Device Disposal 50
14 DMX CONTROL TABLE 51

1 DOCUMENT VERSION AND REVISIONS

Version	Date	Implemented changes
v1.0	03/2026	Original version

2 INTRODUCTION

2.1 YOU MADE THE RIGHT CHOICE!

This product has been developed and manufactured to the highest quality standards to ensure many years of problem-free operation. Find further information about Cameo on our website: www.cameolight.com

2.2 CONTACTS

	Adam Hall GmbH Headquarter	Customer Service
E-mail	info@adamhall.com	customerservice@adamhall.com
Phone	+49 6081 9419-0	+49 6081 941973-0
Street	Adam-Hall-Str. 1	Adam-Hall-Str. 1
Postal code / city	61267 Neu-Anspach	61267 Neu-Anspach
Website	*www.adamhall.com*	*www.adamhall.com*

2.3 LINK TO THE DOWNLOAD CENTRE

You can download some information, such as CAD data or technical data, from the Download Centre. Scan the QR code or click the link to download this information:

2.4 VISUALISATION CONVENTIONS IN THIS USER MANUAL

In this manual we use graphical symbols and icons in certain contexts. Find below a table with explanations and use cases of the graphical symbols and icons.

Icon / Symbol	Designation	Context	Explanation / Example
↙	**Prerequisite**	Tasks	Used in task topics to indicate a prerequisite that must be met before beginning the task.
⇨	**Result / Intermediate Result**	Tasks	Used in task topics to indicate a result or intermediate result of an action step.
1 Step **a)** Substep	**1 Action Step** **a) Substep**	Tasks	Used in task topics to indicate action steps and substeps.
1	**Callout**	Graphics; tasks	Text-image reference or labeling of certain functions on the device

Icon / Symbol	Designation	Context	Explanation / Example
[...]	**Value range indicator**	Technical data; paragraphs; lists	Indicates the range of a value, such as "Compressor ratio: **1:1...20:1**". Mostly used in tables or callouts.
*	**Asterisk**	Paragraphs; tables	Indicates additional information in a footnote.
The **LIM** LED lights up	**General User Interface element**	Paragraphs; tasks; tables; lists	The words presented in this way represent graphic user interface elements on the device.
PAGE button	**Key / Button**	Paragraphs; tasks; tables; lists	The words presented in this way represent user interface controls on the device.
`<name>`	**User input**	Paragraphs; tasks; tables; lists	The words presented in this way represent required user inputs.
https://adamhall.com	**Weblink**	Paragraphs; tables; lists	External link to a website

3 PRODUCT COMPLIANCE

3.1 MANUFACTURER'S DECLARATION

Adam Hall offers a voluntary, EU-wide manufacturer's guarantee of 2 years. The statutory warranty period is not affected by this voluntary guarantee.

Visit the Adam Hall Service Portal to access the **Download Centre**:

https://portal.adamhall.com/

Under the **Service & Regulations** section, you find our current detailed manufacturer's declarations, warranty conditions, and limitation of liability.

To request warranty for a product, please contact:

Adam Hall GmbH, Adam-Hall-Str. 1, 61267 Neu-Anspach

customerservice@adamhall.com

0049 (0)6081 / 9419-1000

3.2 DECLARATION OF CONFORMITY

Hereby, Adam Hall Ltd. declares that this product meets the following guidelines (where applicable)

- Electrical Equipment (Safety) Regulations 2016
- Electromagnetic Compatibility Regulations 2016 (SI 2016/1091)
- The Restriction of the Use of Certain Hazardous Substances in Electrical and Electronic Equipment Regulation 2012 (SI 2012/3032)
- Radio Equipment Regulations 2017 (SI 2016/2015)

Products that are subject to Electrical Equipment(Safety)Regulation 2016, EMC Regulation 2016 or RoHS Regulation can be requested at info@adamhall.com. Products that are subject to the Radio Equipments Regulations 2017 (SI2017/1206) can be downloaded at *http://www.adamhall.com/compliance*.

FCC STATEMENT

This device complies with part 15 of the FCC Rules. Operation is subject to the following two conditions:

1. This device may not cause harmful interference.
2. This device must accept any interference received, including interference that may cause undesired operation.

⚠ CAUTION! RF Exposure Information: This equipment complies with FCC radiation exposure limits set forth for an uncontrolled environment. This equipment should be installed and operated with minimum distance 20 cm between the radiator and your body.

⚠ CAUTION! Any changes or modifications to this device not explicitly approved by the manufacturer could void your authority to operate this equipment.

This equipment has been tested and found to comply with the limits for a Class B digital device, pursuant to part 15 of the FCC Rules. These limits are designed to provide reasonable protection against harmful interference in a residential installation. This equipment generates, uses and can radiate radio frequency energy and, if not installed and used in accordance with the instructions, may cause harmful interference to radio communications. However, there is no guarantee that interference will not occur in a particular installation. If this equipment does cause harmful interference to radio or television reception, which can be determined by turning the equipment off and on, the user is encouraged to try to correct the interference by one or more of the following measures:

- Reorient or relocate the receiving antenna.
- Increase the separation between the equipment and receiver.
- Connect the equipment into an outlet on a circuit different from that to which the receiver is connected to.
- Consult the dealer or an experienced radio/TV technician for help.

ISED STATEMENT

This device contains licence-exempt transmitter(s)/receiver(s) that comply with Innovation, Science and Economic Development Canada's licence-exempt RSS(s). Operation is subject to the following two conditions:

1. This device may not cause interference.
2. This device must accept any interference, including interference that may cause undesired operation of the device.

The digital apparatus complies with Canadian CAN ICES-005 (B)/NMB-005(B).

This equipment complies with IC RSS-102 radiation exposure limits set forth for an uncontrolled environment. This equipment should be installed and operated with minimum distance 20 cm between the radiator and your body.

This device meets the exemption from the routine evaluation limits in section 2.5 of RSS 102 and compliance with RSS 102 RF exposure, users can obtain Canadian information on RF exposure and compliance.

4 SAFETY INSTRUCTIONS

4.1 INTENDED USE

The **OPUS® X4 IP** is intended for use as a motorised lighting device to generate controllable light output and movement in event and entertainment environments.
This product has been developed for the professional use in the field of event technology. Furthermore it is intended for qualified users with specialist knowledge of event technology only.
This product is intended for mobile applications and not for fixed installations.
This product is intended for temporary outdoor use only.
This product is not suitable for domestic use.
Do not use the product outside the operating conditions as stated in the user manual under Technical Data. Liability for damage and third-party damage to persons and property due to inappropriate use is excluded.
This product is not suitable for children and persons with limited physical, sensory, or mental capabilities or lack of experience and knowledge.

4.2 EXPLANATION OF SAFETY AND WARNING SYMBOLS

Find the following safety and warning symbols on the device, the user manual, or the packaging:


This symbol indicates that you must read the complete user manual before using the product.


This symbol indicates a general hazardous situation.


This symbol indicates hazards that can cause electric shock.


This symbol indicates hazards caused by hot surfaces.


This symbol indicates tripping hazards.


This symbol indicates hazards due to corrosive substances.


This symbol indicates hazards due to toxic substances.


This symbol indicates hazards due to leaking batteries.


This symbol indicates pinching hazards.


This symbol indicates hazards due to overhead loads.



This symbol indicates hazards due to optical radiation



This symbol indicates that looking or staring into the light source must be avoided.

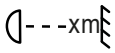

This symbol indicates the minimum distance in meters (m) between the light head and the illuminated surface. Find the corresponding value for this device under Technical Data in the complete user manual and as imprint on the housing of the device.



This symbol indicates that the product is not suitable for household use.



This symbol indicates that the product has no serviceable parts. Only authorized personnel is allowed to perform maintenance or service work.



This symbol indicates helpful hints or additional information.

4.3 STRUCTURE OF WARNING MESSAGES

In this user manual, warning messages are structured with a safety symbol, a signal word, a hazard description, and instructions on how to avoid injuries or death.



DANGER

Indicates a hazardous situation which will result in death or serious injury.



WARNING

Indicates a hazardous situation which could result in death or serious injury



CAUTION

Indicates a hazardous situation which could result in minor or moderate injury.



NOTICE

Indicates situations or conditions that could result in damage to property and/or the environment.

4.4 GENERAL SAFETY





- Read this document carefully.
- Keep this document for later reference.
- Follow closely the instructions in this document.
- This document is an integral part of the product. If you sell or pass on the product, you must include this document.
- Only use this product according to its intended use.
- Risk of choking. Keep small parts away from children and individuals with impaired physical, sensory, or mental capabilities.
- Risk of suffocation. Keep plastic bags away from children and individuals with impaired physical, sensory, or mental capabilities.

- Observe all safety instructions and warning messages in this document, on the device, and on the packaging.
- Products are subject to continuous further development. If you find discrepancies between this document and the product labeling, the information on the product always takes priority.
- Do not remove safety instructions or warning messages from the product.
- Do not open the device.
- Do not modify the product.
- If the product shows any sign of damage, do not use it.
- Do not operate the product with removed or missing covers.
- Do not expose the product to direct sunlight.
- If not further specified in the user manual under Technical Data, do not use the product in ambient temperatures that exceed 45 °C / 113 °F or fall below -15 °C / 4 °F
- Do not use the product in tropical climate.
- Do not use the product above 2000 metres of altitude.
- Unless otherwise stated, do not use the product under marine conditions.
- Use only accessories specified by the manufacturer.
- Maintenance and repairs may only be carried out by authorized service personnel.
- Store and transport the product in a dry and safe environment.
- Clean the product on a regular basis. If applicable, see the user manual for maintenance intervals.
- If the device was exposed to strong temperature changes, such as during transport, do not switch it on immediately. Wait until the device has reached ambient temperature.

4.5 ELECTRICAL SAFETY



- This is an electrical device in protection class I. Make sure that the protective conductor is connected to electrical earth. Do not disconnect the protective conductor.
- Do not bypass the mains fuse.
- Use only mains fuses as specified by the manufacturer.
- Do not use kinked or otherwise damaged power cables.
- Only operate the device on compliant, tested and intact mains power outlets.
- Make sure that the voltage and frequency of the mains power match the values specified by the manufacturer.
- Take suitable measures against overvoltage, such as lightning strikes.
- For devices with a power out connector, make sure the total current consumption of all connected devices does not exceed the value specified by the manufacturer.
- This device is not suitable for continuous current.
- Disconnect the device from all poles before maintenance, repair or extend periods of non-use.
- Permanently connected power cables may only be replaced by a qualified service technician.

4.6 PHYSICAL SAFETY



- Make sure that all mounting connections are adequately dimensioned. Observe the relevant regional safety guidelines when mounting the device.



- Make sure that the device and any accessories are securely positioned. Secure against unintentional movement.



- Check all load-bearing screw connections regularly and replace them if necessary.
- Check all cable routes to prevent tripping accidents.



- Moving components, such as mounting brackets, pose a risk of pinching injuries.
- Devices with motor-driven components, such as moving lights, pose a risk of injury due to the movement of the appliance.

4.7 THERMAL SAFETY



- Do not install the device near heat sources, such as radiators or ovens.
- Do not block any ventilation openings.
- Unless otherwise stated, keep a minimum clearance of at least 20 centimetres around the device.
- Unless otherwise stated, keep flammable materials, such as paper or wood, at least 50 centimetres away from the device
- Risk of burning. The device housing can become very hot during normal operation. Make sure that the housing cannot be touched accidentally. Allow the device to cool down sufficiently before dismantling, maintenance work, transport, or charging.
- Always adhere to the minimum distance to the illuminated surface, as stated on the device.

4.8 WIRELESS SAFETY



Risk of injury and damage to devices. Do not use W-DMX™ transmissions for safety-relevant applications, such as DMX-controlled motors, DMX-controlled hydraulic systems, or comparable moving components. Do not use W-DMX™ transmissions for pyrotechnic devices, gas effects, or liquid effects. This includes CO2 cannons, confetti shooters, and similar effects.

Radio transmitter operation is subject to official regulations. Make sure you adhere to regional guidelines before commissioning.

Radio operation can lead to potentially dangerous effects. Do not use this device in sensitive areas such as:

- Hospitals, health centres or other healthcare facilities that provide patient treatment with skilled personnel and equipment
- Explosive atmospheres, including:
  - ATEX zones (Zone 0, 1, 2, 20, 21, 22) (EU)
  - Hazardous Locations Class I, II and III (US/Canada)
- Restricted areas
- Military facilities
- Areas where the use of mobile phones is prohibited, such as aircrafts.



Quality and performance of wireless signal transmissions is dependent on the environmental conditions. All range specifications refer to free-field application with visual contact without interference. Range and signal stability may be influenced by:

- Shielding, such as masonry, metal buildings, or water
- Interference
- High radio traffic, such as strong W-LAN networks
- Electromagnetic radiation, such as LED video walls or dimmers

4.9 PHOTOBIOLOGICAL SAFETY





- Risk of eye damage. This device is a risk group 2 device. Do not look directly into the light outlet. Do not stare into the light beam. Do not look directly into the lamp with any optical instrument, such as magnifiers or binoculars.
- Risk of seizures. Stroboscopic effects may cause epileptic seizures in susceptible persons.
- Always point the lamp towards the ground, when it is not in use.

4.10 DEVICE SAFETY



- Do not switch the device on and off in quick succession, because this will shorten the device lifetime.
- Do not lift the device by the head or the yoke. Only lift the device by the base carrying handles.
- Do not expose the device to direct sunlight, laser radiation, and bundled light beams from other spotlights to prevent damage to the housing and internal components.
  - Use the device's sunlight protection via DMX.

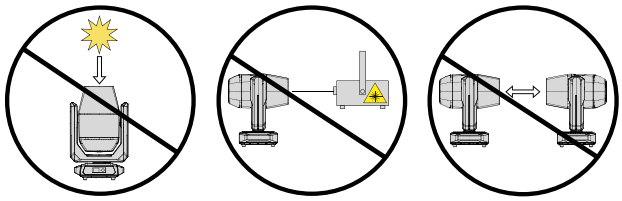

5 PRODUCT DESCRIPTION

5.1 PRODUCT OVERVIEW

The **OPUS® X4 Profile IP** is an IP65 Spot Profile Moving Head.

FEATURES:

- 1,400 W LED
- Luminous flux with 50,000 lm
- CMY colour mixing + linear CTO correction
- Framing blades with +-60° rotation
- 2 Colour wheels with eight colours plus open
- 2 Gobo wheels with seven rotatable gobos plus open
- Zoom range: 5 ° … 50 °
- Animation wheel
- IP65 protection class
- Hight light output 50,000 Lumen
- Flexible control via DMX / RDM, Art-Net, sACN, W-DMX, and CRMX

5.2 TECHNICAL DATA

PHOTOMETRIC VALUES

Parameter	Value
Luminous flux	50000 lm
Risk group	2
Front lens diameter	185 mm
Focusing type	Driven
LED PWM frequency	650 Hz, 1,530 Hz, 3,600 Hz, 12 kHz, 18.9 kHz, 25 kHz
Dimmer resolution	16 Bit
Dimmer curves	Exponential, Logarithmic, S curve, Linear

COLOURS

Parameter	Value
Colour mix functions:	CMY + CTO
LED colours	White
Correlated colour temperature (CCT)	2600 K ... 6000 K

MOVEMENT

Parameter	Value
Pan	630 °
Tilt	270 °

EFFECTS

Parameter	Value
Gobo wheels	2
Gobo wheel 1 – functions	Rotatable
Gobo wheel 1 – gobos	6
Gobo wheel 2 – functions	Rotatable
Gobo wheel 2 – gobos	6
Prism layers	1
Prisms in total	2
Strobe	1 Hz … 20 Hz
Iris	Yes
Frost	2
Animation	Yes
Framing blades	Yes
Framing blades rotation	-60 ° … 60 °

CONTROL

Parameter	Value
Controller protocols	DMX512, RDM, Art-Net, sACN, W-DMX™ (Transceiver), CRMX
Number of DMX control mode	3
Stand alone operating modes:	Stand-alone, Endless loop
Data in connector:	XLR 5-pole male, RJ-45 socket
Data out connector:	XLR 5-pole female, RJ-45 socket

MAINS OPERATION

Parameter	Value
Operation voltage	100 V AC … 240V AC, 50 Hz/60 Hz
Rated power	1780W
Mains connector	Mains plug device outdoor female & TRUE1®

HOUSING

Parameter	Value
Cabinet material	Aluminiun
Colour	Black

COOLING

Parameter	Value
Cooling system	Temperature controlled fan cooling
Cooling mode	Auto, Max. intensity, Silent, On/Off

ENVIRONMENTAL

Parameter	Value
Protection class	IP65
Ambient temperature	-20 ... 45 °C

DIMENSIONS & WEIGHT

Parameter	Value
Width	475 mm
Height	860 mm
Depth	350 mm
Weight	46 kg

5.3 OPTIONAL ACCESSORIES

Accessory	Item number
OMEGA BRACKET 3	**CLOMEGABRACKET3** Further information and ordering options are available here: *OMEGA BRACKET 3*

5.4 USER INTERFACE

5.4.1 FRONT PANEL OVERVIEW

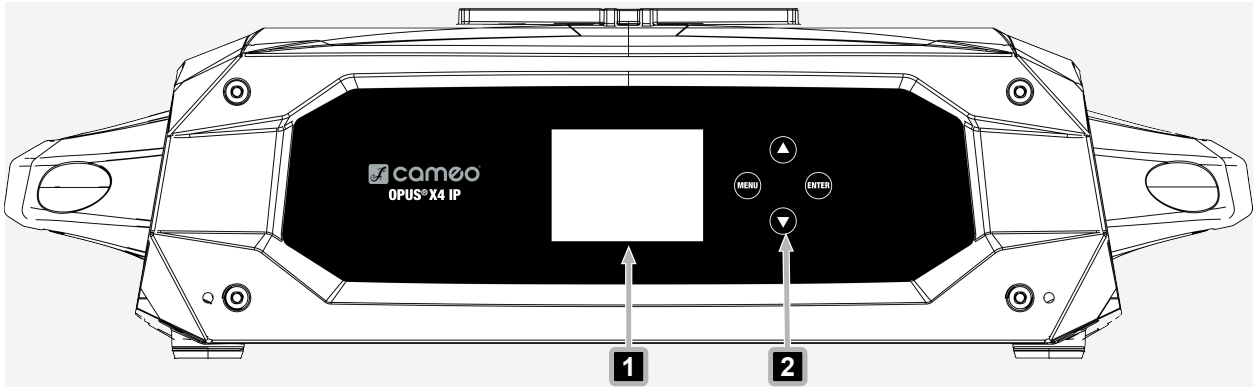

1 **LC - Display** - Main graphic display

2 **Touch-sensitive controls** - Opens the menu structure and navigates the device

5.4.2 REAR PANEL OVERVIEW

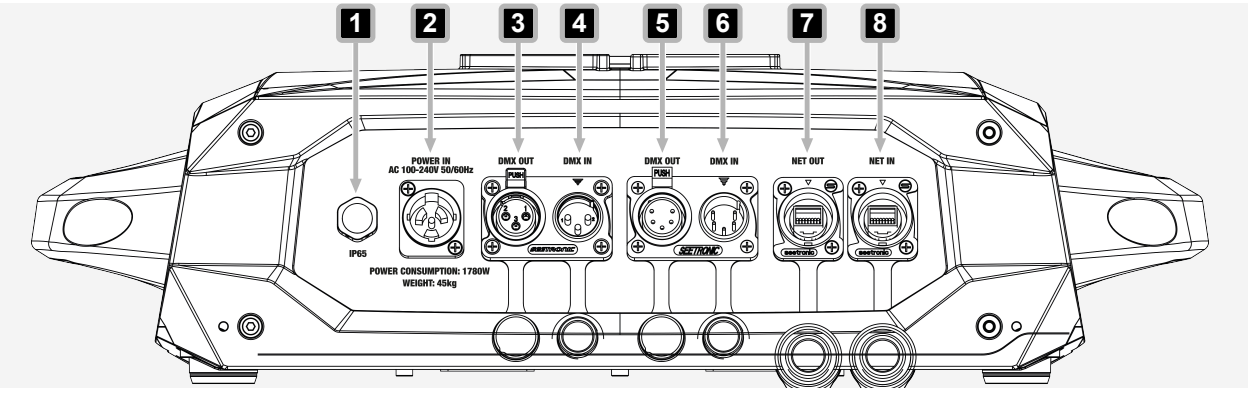

1 **Pressure equalisation valve** - Balances internal pressure, prevents moisture ingress and reduces condensation

2 **POWER IN** - IP65 mains power socket. When not in use, seal with rubber sealing cap.

3 **DMX OUT** - Female IP65 5-pin XLR socket for relay of DMX control signal. When not in use, seal with rubber sealing cap.

4 **DMX IN** - Male IP65 5-pin XLR socket for connection of an DMX control device. When not in use, seal with rubber sealing cap.

5 **DMX OUT** - Female IP65 5-pin XLR socket for relay of DMX control signal. When not in use, seal with rubber sealing cap.

6 **DMX IN** - Male IP65 5-pin XLR socket for connection of an DMX control device. When not in use, seal with rubber sealing cap.

7 **NET OUT** - RJ45 network output connector to Art-Net or sACN network. When not in use, seal with rubber sealing cap.

8 **DMX IN** - Male IP65 5-pin XLR socket for connection of an DMX control device. When not in use, seal with rubber sealing cap.

6 GENERAL INFORMATION

6.1 ABOUT DMX TECHNOLOGY

6.1.1 DMX STANDARD

DMX (Digital Multiplex) is a universal transmission protocol for sending a serial data stream from controllers to fixtures. DMX is the common 'language' used to control a large number of fixture types and models from different manufacturers. Fixtures can be connected with one another and controlled via a central controller.

6.1.2 DMX CONNECTION

The DMX data stream is forwarded from one connected fixture to the next via the DMX input and DMX output connectors (3-pin XLR or 5-pin XLR). The maximum number of fixtures in the chain must not exceed 32 units. The last fixture in the chain must be equipped with a terminating resistor (terminator).
For optimum data transmission, it is necessary to keep the connecting cables between the individual fixtures as short as possible. The order in which the devices are integrated in the DMX network has no influence on the addresses.

6.1.2.1 CONNECTING MULTIPLE FIXTURES

1. Connect the male XLR connector (3-pin or 5-pin) of the DMX cable to the DMX output (female XLR socket) of the DMX controller.
2. Connect the female XLR connector (3-pin or 5-pin) of the DMX cable to the DMX input (male XLR socket) of the first fixture.
3. Daisy chain all other fixtures in the same way by connecting the DMX output (female XLR socket) to the DMX input (male XLR socket) of the next fixture.

> The maximum number of fixtures in the chain must not exceed 32 units.

6.1.3 PIN ASSIGNMENT

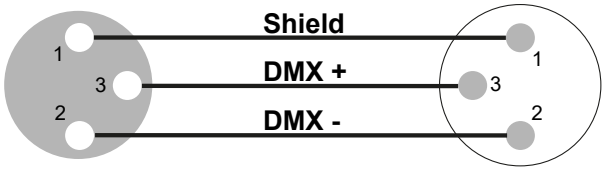

DMX cable with 3-pin XLR connectors

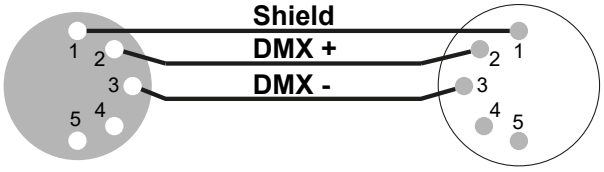

DMX cable with 5-pin XLR connectors (pin 4 and 5 are not used)

6.1.4 DMX TERMINATORS

The last fixture in a DMX chain needs to be equipped with a terminating resistor (120 Ω, 0,25 W) to prevent system errors.

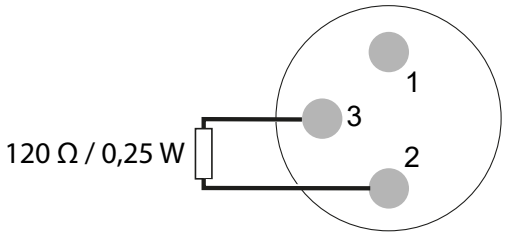

DMX Terminator 3-pin

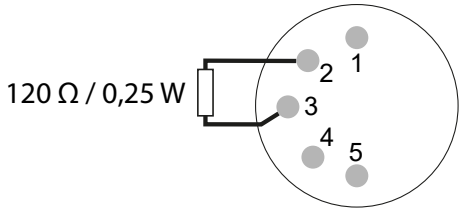

DMX Terminator 5-pin

6.1.5 DMX ADAPTERS

The combination of DMX fixtures with 3-pin connections and DMX fixtures with 5-pin connections in a DMX chain is possible with suitable adapters.

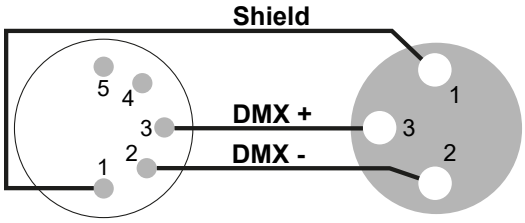

DMX Adapter 5-pin XLR male to 3-pin XLR female

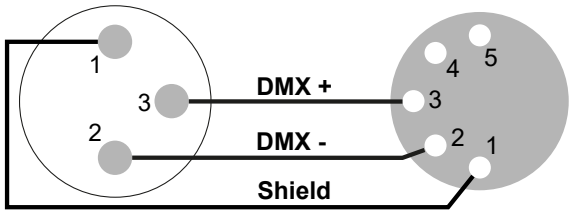

DMX Adapter 3-pin XLR male to 5-pin XLR female

6.2 EXPLANATION OF THE IP RATING

The IP rating or ingress protection code indicates how well a device is protected against water, dust, solid foreign objects, and contact with hazardous parts.

IP Rating does not describe general bad weather resistance.

The first identification digit indicates the level of protection against the ingress from dust, solid foreign bodies and contact with hazardous parts:

IP2X	Protection against solid foreign bodies ≥ 12.5 mm in diameter
IP3X	Protection against solid foreign bodies ≥ 2.5 mm in diameter
IP4X	Protection against solid foreign bodies ≥ 1.0 mm in diameter
IP5X	Protection against dust in harmful quantities and completely protected against contact.
IP6X	Dust-tight and completely protected against contact from solid foreign bodies

Table 1: IP Rating - First identification digit

The second identification digit indicates the level of protection against the ingress from water:

IPX0	No protection
IPX1	Protection against dripping water
IPX2	Protection against dripping water when the device is tilted up to 15°
IPX3	Protection against falling spray water up to 60° from the vertical
IPX4	Protection against splashing water on all sides
IPX5	Protection against water jets (nozzle) from any angle
IPX6	Protection against strong water jets
IPX7	Protection against temporary immersion and ingress of water in harmful quantity

Table 2: IP Rating - Second identification digit

7 PREPARATION

7.1 SCOPE OF DELIVERY

Item Description	Quantity
Device	1
Mains power cable	1
OMEGA BRACKET 3	2
Safety Compliance Information (en, de, fr, it, pl, es)	1

7.2 TRANSPORT

NOTICE

Pan Lock or Tilt Lock unlocked during installation

Risk of damage to the device

a. Keep Pan Lock and Tilt Lock locked until the device is installed in its final position.

7.2.1 USING THE SIDE RECESSES OR BASE HANDLES FOR TRANSPORT

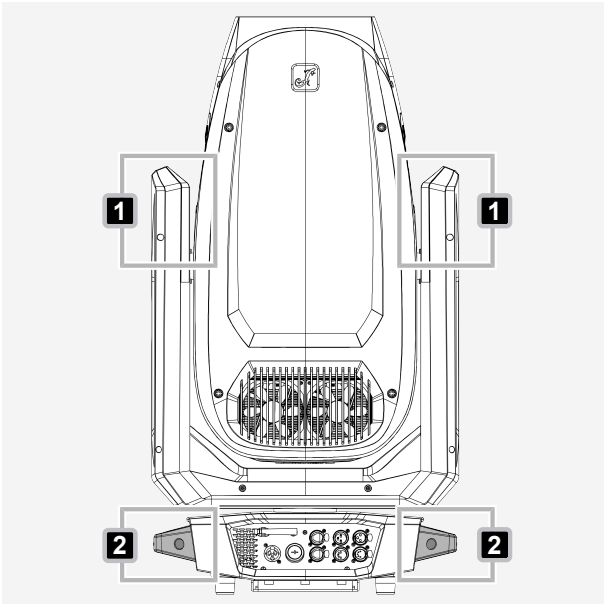

1 Use the recessed grips 1 to lift or reposition the fixture.

2 Use the transport handles 2 to move the fixture over longer distances.

NOTICE! Risk of damage to internal arm components. The recessed grips are intended only for lifting or short repositioning. To protect the internal arm components, use the transport handles exclusively for longer transports.

7.2.2 UNLOCKING THE TILT LOCK

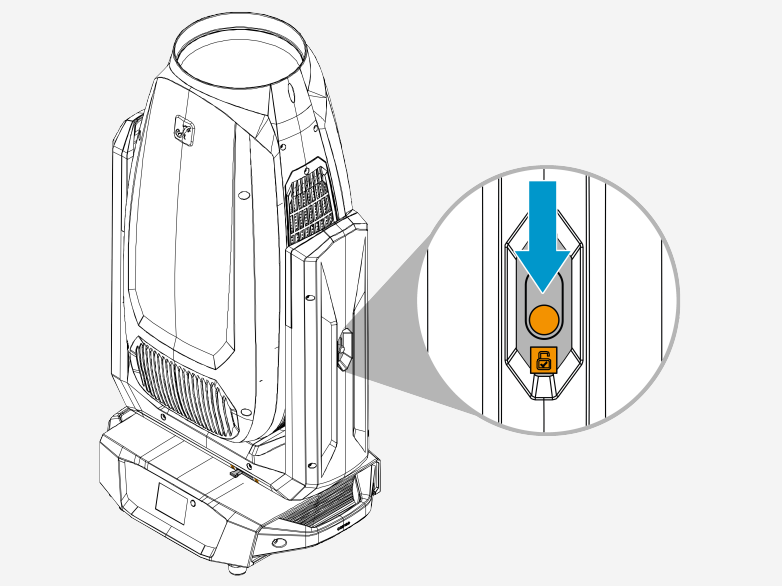

1 Slide the Tilt Lock mechanism to the unlocked position.

7.2.3 UNLOCKING THE PAN LOCK

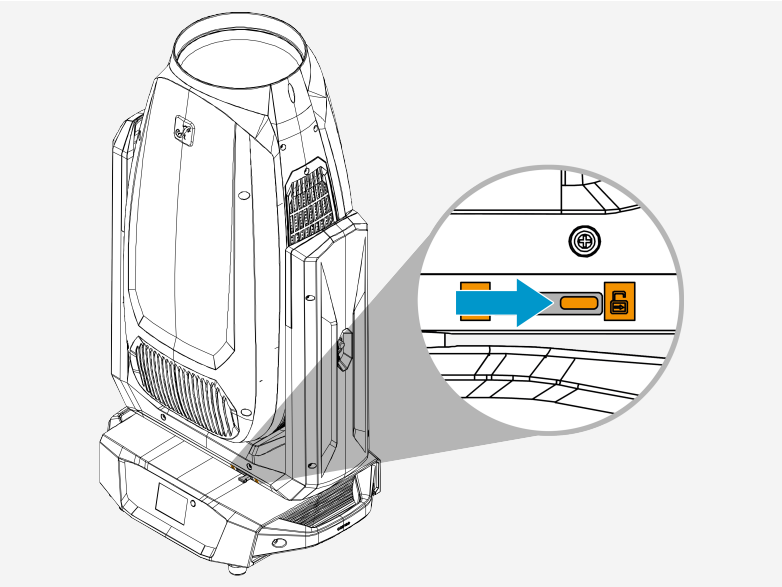

1 Slide the Pan Lock mechanism to the unlocked position

7.2.4 LOCKING THE TILT LOCK

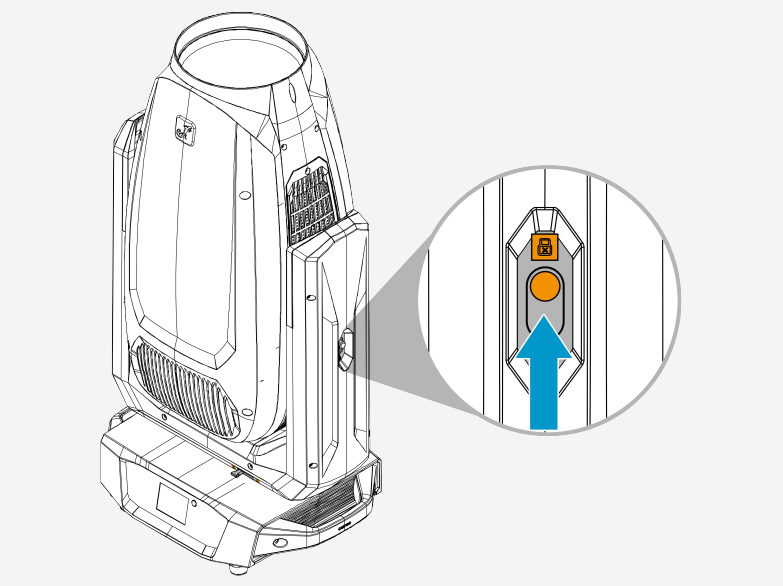

1. Disconnect the power supply.
   ⇨ The fixture is powered off.
2. Rotate the head until it aligns with the designated tilt-lock position.
3. Slide the Tilt Lock mechanism to the locked position.

7.2.5 LOCKING THE PAN LOCK

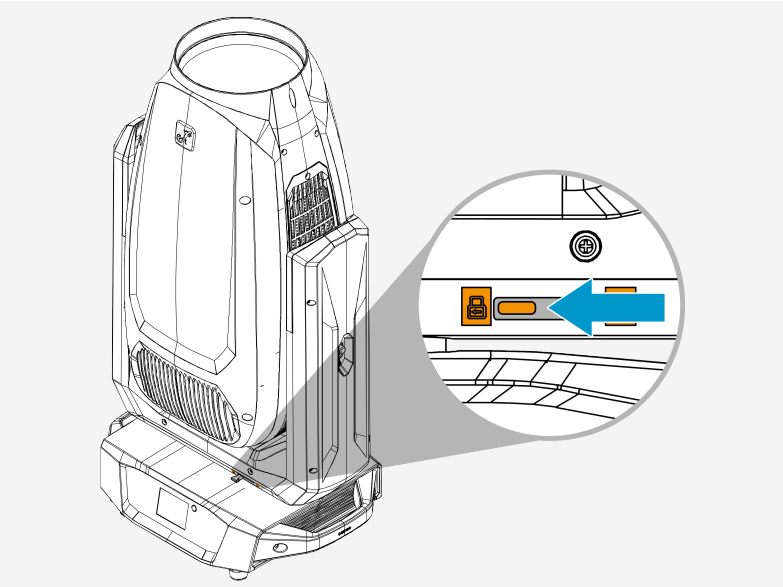

1. Disconnect the power supply.
   ⇨ The fixture is powered off.
2. Rotate the head until it aligns with the pan-lock position on the base.
3. Slide the Pan Lock mechanism to the locked position.

8 INSTALLATION

8.1 OMEGA BRACKET MOUNTING MECHANISM OVERVIEW



1 **Mounting bolt lever**

2 **Mounting bolt**

3 **Protrusion**

8.2 ATTACHING OMEGA BRACKETS

WARNING

Falling object

Risk of serious injury

a. Observe all regional safety regulations concerning overhead loads.
b. Make sure that the device is securely mounted.
c. Make sure that the mounting accessory supports the weight of the device.
d. Before any assembly, check that all mounting bracket components are complete, undamaged and work correctly.

CAUTION

Pinching Hazard

Risk of Injury

a. Be cautious while attaching the brackets. Handle with care to avoid injury.

NOTICE

Pan Lock or Tilt Lock unlocked during installation

Risk of damage to the device

a. Keep Pan Lock and Tilt Lock locked until the device is installed in its final position.

✓ Pan Lock and Tilt Lock are activated.

✓ The device is powered off.

1 Place the device on its side.

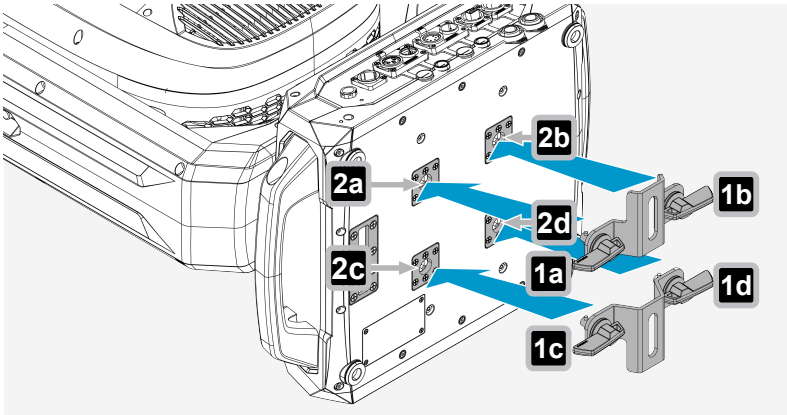

2 Align the mounting bolts **1** of the omega bracket with 2 mounting points **2** on bottom of the device.

ⓘ Make sure that the protrusions on the bolts **1** fit into the recesses of the mounting points **2**.

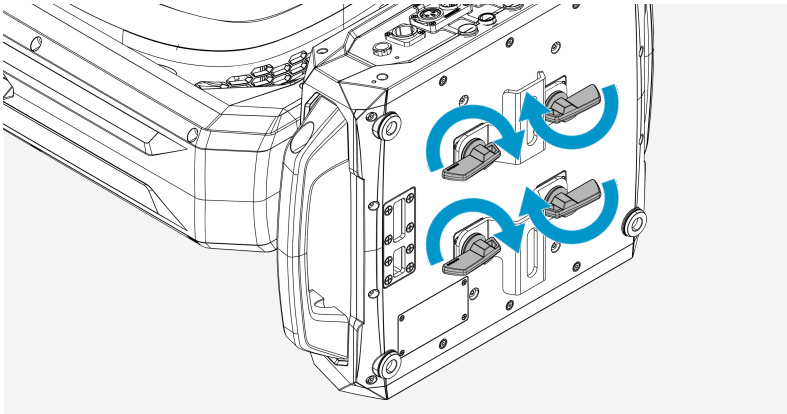

3 Turn the mounting bolt lever clockwise until it is tight.

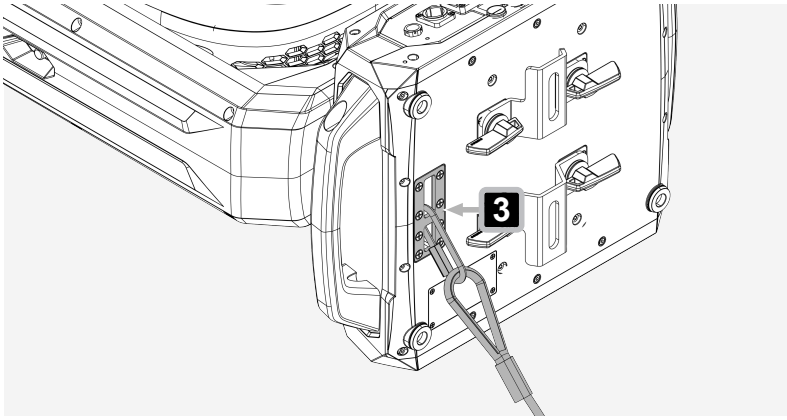

Attach the safety cable to the securing lug **3**.

ⓘ Suitable truss clamps are sold separately.

See also:
Optional Accessories [› 18]
Transport [› 23]

8.3 MOUNTING AND POSITIONING THE DEVICE FOR OPERATION

NOTICE! Risk of improper operation and damage to the fixture. Do not mount the fixture vertically on a truss or wall surface. Vertical mounting can place excessive load on the fixture's mechanical structure and may lead to damage or unsafe operating conditions.

MOUNTING THE FIXTURE OVERHEAD

- ✓ The Omega brackets are correctly attached to the fixture
- ✓ A level truss is available for mounting the fixture overhead.
- ✓ Truss clamps

1. Place the fixture onto the truss in a stable hanging position.
2. Secure the fixture using an approved safety cable.
3. Secure the fixture using the appropriate truss clamps.
4. Unlock the pan and tilt locks

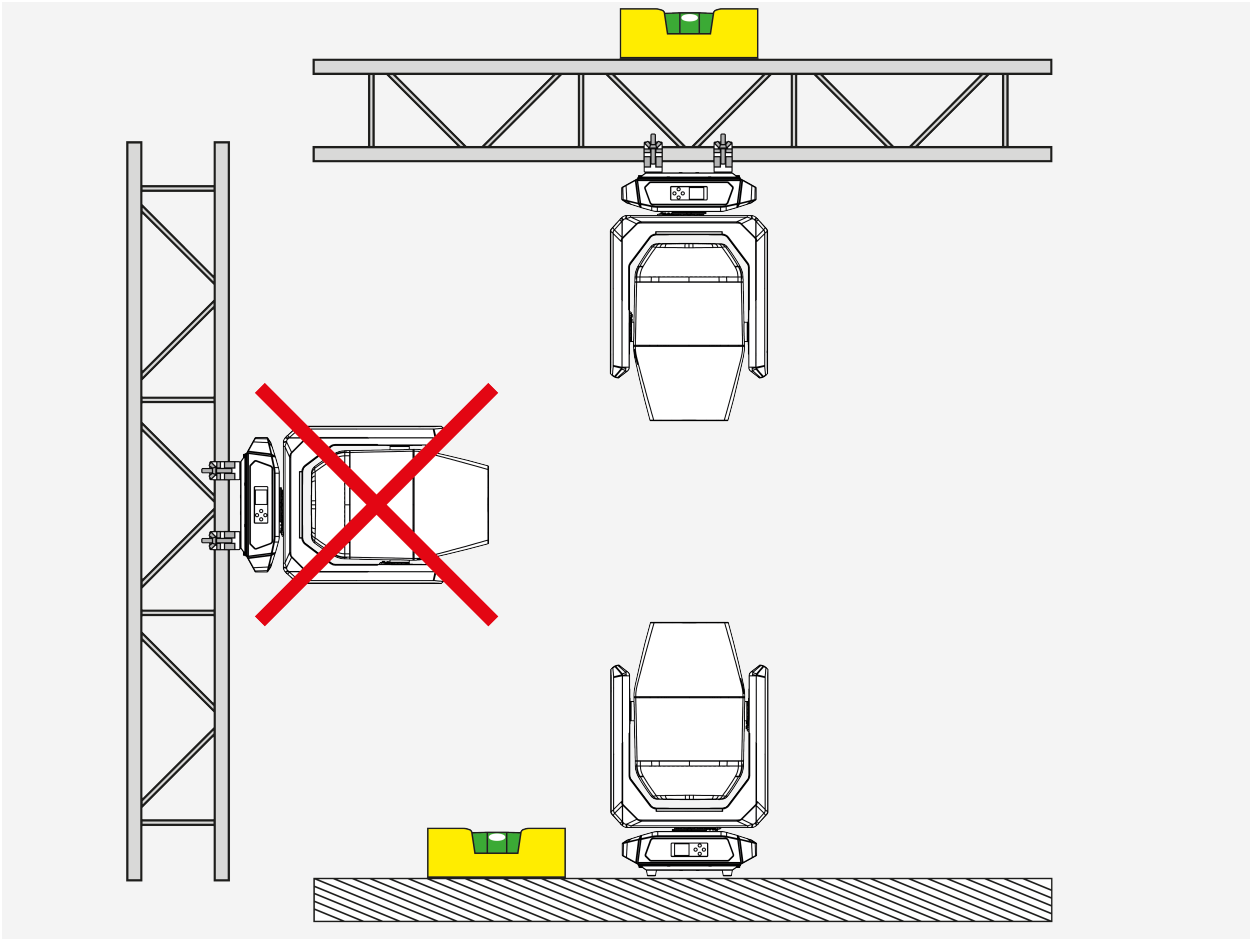

POSITIONING THE FIXTURE ON THE FLOOR

- ✓ A level surface is available for operating the fixture on the floor.

5. Place the fixture on the floor
6. Unlock the pan and tilt locks

9 OPERATION

9.1 POWER SUPPLY

9.1.1 TURNING THE DEVICE ON OR OFF

WARNING

Mains voltage

Risk of electric shock

a. Do not use kinked or damaged mains power cables.

NOTICE

Damage to the device

a. Make sure that the voltage of the mains power socket matches the device operating voltage.
b. Do not plug the device under load.

1 Plug the device power connector into the device. Make sure the bayonet connector is positioned correctly.
2 Turn the bayonet connector clockwise to lock it.
3 Plug the mains power connector into the mains power socket.
⇨ The display turns on, the device boots, and performs a sequence of moves.
⇨ After a few seconds, the device is operational.

9.1.2 DISCONNECTING A MAINS POWER CABLE

NOTICE

Damage to the device

a. Make sure that the voltage of the mains power socket matches the device operating voltage.
b. Do not unplug the device under load:
i) Unplug the mains power connector of the mains power cable from the mains power socket first.
ii) Unplug the device power connector from the device power socket last.

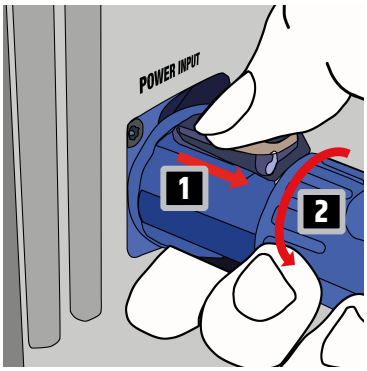

1 Disconnect the connector of the mains power cable from the mains power socket.
2 Pull the locking lever of the bayonet connector backwards and hold it. 1
3 Turn the bayonet connector anticlockwise. 2
4 Pull the bayonet connector out of the device power socket.

9.2 DEVICE NAVIGATION

9.2.1 USING THE CONTROL PANEL

NOTICE

Control panel dirty or damp
Functionality impaired
a. Make sure that the control panel is dry and clean.

1 Press **MENU** / ◀ to access the main menu.
2 Press ▲ or ▼ to navigate through the menu items.
3 Press **ENTER** / ▶ to access a submenu or to change the value of a menu item.
4 Press ▲ or ▼ to change the value of a menu item.
5 Press **MENU** / ◀ to return to the next higher menu layer or the main display.

The selected menu item appears as the header of the new view, as shown in this example.

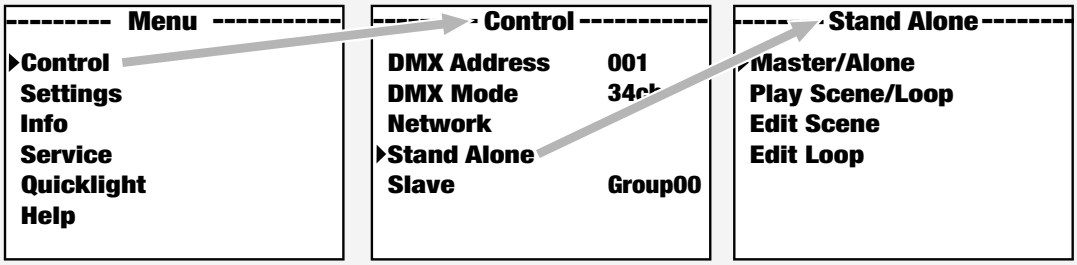

9.2.2 USING THE BATTERY-POWERED DISPLAY

The device has a battery-powered display. The battery-powered display allows to access and change settings without a power supply.

When using the battery-powered display, all external device controls are deactivated. The main display indicates that there is no control signal.

1 Press and hold **MENU** / ◀ for approximately 10 seconds.
⇨ The display turns on.
2 Make the required settings.

9.3 CONFIGURING THE DEVICE

9.3.1 SETTING THE DMX START ADDRESS

⚠ **WARNING!** Risk of eye damage. As soon as the DMX start address is entered, the device may immediately activate if a DMX signal is present and may cause glare.

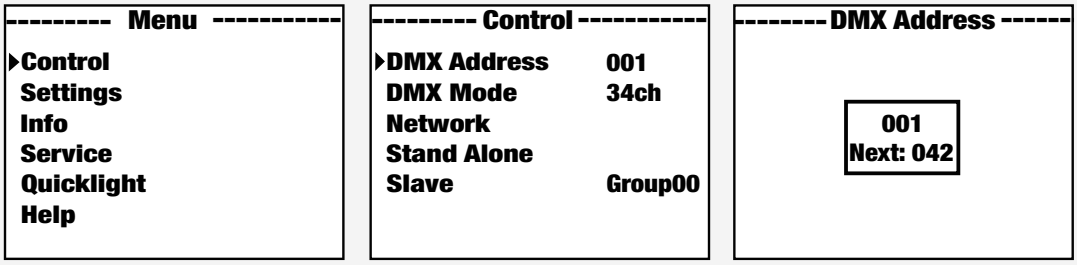

1 In the main menu, choose **Control**>**DMX Address**.
2 Use the control panel to adjust the desired DMX start address.

9.3.2 SETTING THE DMX MODE

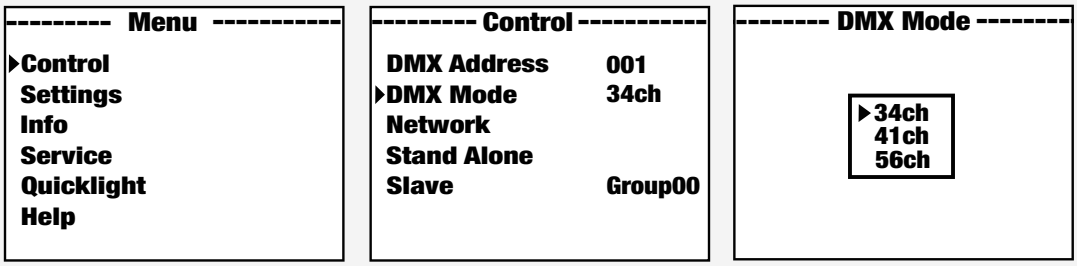

1 In the main menu, choose **Control**>**DMX Mode**.
2 Use the control panel to adjust the settings.

Find DMX tables with the channel assignments in the DMX CONTROL section of this user manual.

9.3.3 SETTING THE NETWORK

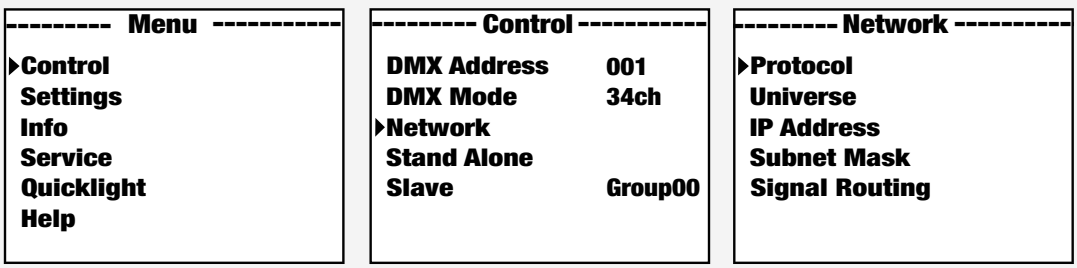

1 In the main menu, choose **Control**>**Network**.
2 Use the control panel to adjust the settings.

9.3.4 SETTING THE IP ADDRESS

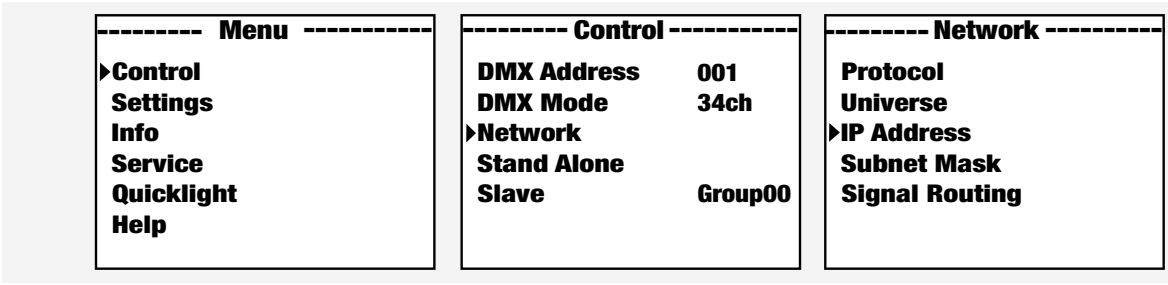

1 In the main menu, choose **Control**>**Network**>**IP Address**.
2 Use the control panel to adjust the settings block by block from left to right.
   a) Enter the values for each block.
   b) Press confirm to move to the next block.

9.3.5 SETTING THE SUBNET MASK

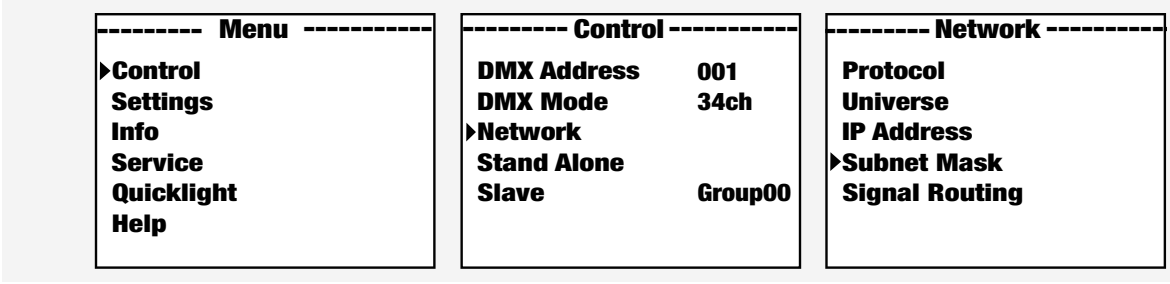

1 In the main menu, choose **Control**>**Network**>**Subnet Mask**.
2 Use the control panel to adjust the settings block by block from left to right.
   a) Enter the values for each block.
   b) Press confirm to move to the next block.

9.3.6 SETTING THE STAND-ALONE MODE

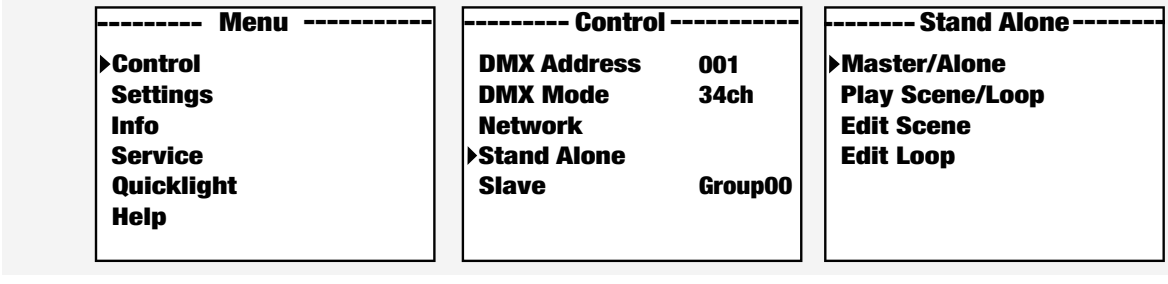

1 In the main menu, choose **Control**>**Stand Alone**.
2 Use the control panel to adjust the settings.

9.3.7 SETTING THE SLAVE MODE

✓ You have activated the control signal output in the master unit by navigating to: **Control**>**Stand Alone**>**Master/Alone**>**Master**.

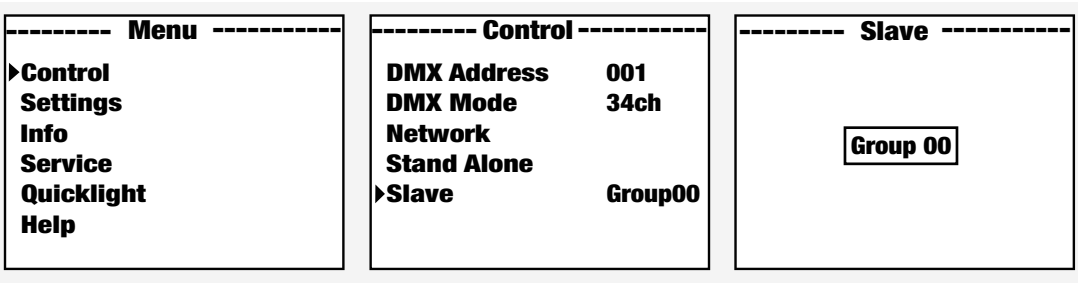

1 In the main menu, choose **Control**>**Slave**.

9.3.8 EXTENDED SLAVE MODE

9.3.8.1 SETUP FOR A RUNNING LIGHT EFFECT



9.3.8.2 SETUP FOR A RUNNING LIGHT EFFECT WITH MASTER AND FIRST SLAVE IN SYNC



9.3.9 PAIRING A WIRELESS DMX RECEIVER WITH A TRANSMITTER

✓ The transmitter and the receiver are located within the same wireless operating range.

1 In the receiver's menu, select **Settings**>**Wireless**>**Operation mode**>**Receive**
2 In the receiver's menu, select **Settings**>**Wireless**>**Linking**>**Receive Reset**.
⇨ The receiver is now ready to pair and waiting for a pairing request.
3 In the transmitter's menu, select **Settings**>**Wireless**>**Operation mode**>**Transmit CRMX/G4/G3**.
4 In the transmitter`s menu select **Settings**>**Wireless**>**Linking**>**Link**.
⇨ The receiver and transmitter will pair automatically.
⇨ The wireless DMX link between fixtures remains active until it is manually disconnected.



Repeat steps 1 and 2 for each receiver you want to connect to a single transmitter.

9.3.10 ABOUT LINKING KEY

A **Linking Key** is an eight-digit numerical code used to pair wireless DMX transmitters and receivers in lighting fixtures. The key always consists of exactly eight characters, and all eight positions must be filled. Each position can contain any digit from 0 to 9.

9.3.11 PAIRING A WIRELESS DMX RECEIVER WITH A TRANSMITTER VIA LINKING KEY

✓ The transmitter and the receiver are located within the same wireless operating range.

1 In the receiver's menu, select **Settings**>**Wireless**>**Operation mode**>**Receive**.
2 In the receiver's menu, select **Settings**>**Wireless**>**Linking**>**Linking Key**.
3 Enter the user-defined `Linking Key`.



The same key must be set on both the transmitter and the receiver.

4 In the transmitter's menu, select **Settings**>**Wireless**>**Operation mode**>**Transmit CRMX/G4/G3**.
5 In the transmitter`s menu select **Settings**>**Wireless**>**Linking Key**.
6 Enter the same `Linking Key` as on the receiver.
⇨ The receiver and transmitter will pair automatically once both devices share the same **Linking Key**.
⇨ The wireless DMX link between fixtures remains active until it is manually disconnected.



Repeat the process for each receiver to pair several receivers to one transmitter (such as for master/slave operation).

9.3.12 UNLINKING A WIRELESS DMX RECEIVER FROM A TRANSMITTER

There are two ways to disconnect the wireless DMX link:

UNLINK FROM THE RECEIVER

1 On the device configured as the receiver, select **Reset** to remove the existing pairing.
⇨ The receiver is now unlinked and ready for a new pairing if needed.

UNLINK FROM THE TRANSMITTER

2 On the device configured as the transmitter, select **Unlink** to disconnect all paired receivers from the transmitter.

> After performing either option, the wireless DMX connection is fully disconnected. The devices will not reconnect automatically unless paired again.

9.3.13 CONFIGURING QUICKLIGHT

Create a static lighting scene directly on the device without using an external controller or DMX console. By defining these basic settings, the **OPUS® X4 Profile IP** will maintain the configured position and light output.

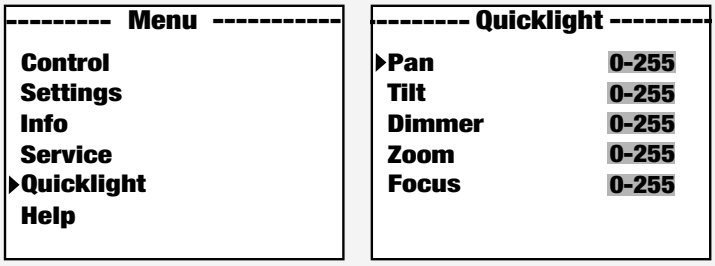

1 In the main menu, choose **Quicklight**.

2 Use the control panel to adjust the settings:

a) **Pan**: Choose a value between 0 and 255 to set the horizontal angle of the head (0 = lowest position, 255 = highest position).

b) **Tilt**: Choose a value between 0 and 255 to set the vertical angle of the head (0 = lowest position, 255 = highest position).

c) **Dimmer**: Choose a value between 0 and 255 to set the light intensity (0 = off, 255 = maximum brightness).

d) **Zoom**: (Beam size) Choose a value between 0 and 255 to adjust the beam angle (0 = narrow beam, 255 = wide beam).

e) **Focus**: Choose a value between 0 and 255 to adjust the focus (0 = softest focus, 255 = sharpest focus).

3 Press **ENTER** or ▶ to confirm.

9.3.14 ACCESSING THE HELP MENU

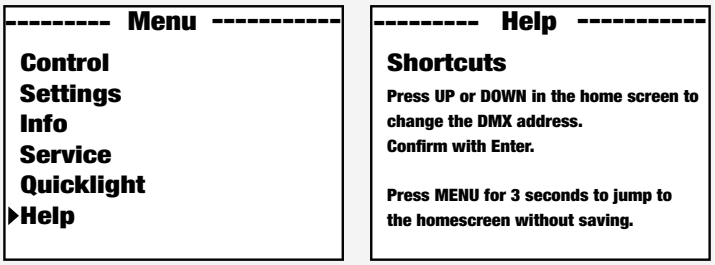

1 In the main menu, choose **Settings**.
2 Use the control panel to access the helpful information.

9.4 MAIN SCREEN

NOTICE

Interrupted control signal

Device functionality may be limited or fail completely and is indicated by flashing text on the display.

a. Check and reconnect the control signal to restore functionality.

9.4.1 WIRELESS DMX STATUS

The display uses a set of icons to indicate the current status of the W-DMX functionality. The following legend explains the different states represented by these icons.

- W-DMX deactivated
- W-DMX activated as receiver; not paired
- W-DMX activated as receiver and paired; transmitter is switched off or out of range
- W-DMX activated as receiver and paired; no DMX signal
- W-DMX activated as receiver and paired; DMX signal present
- W-DMX activated as transmitter

9.4.2 MAIN SCREEN OVERVIEW

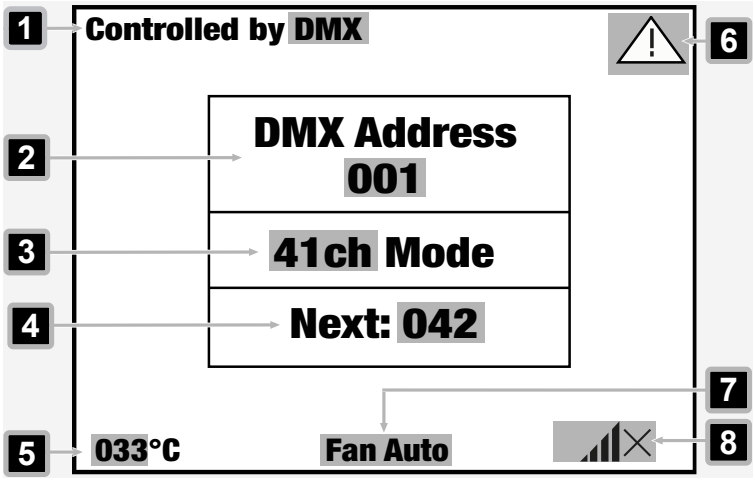

1 **Controlled by** - Displays the selected input type (**None**, **DMX**, **Wireless Link**, **SPI**, **BLE**)

2 **DMX Address** - Indicates the set DMX start address

3 **Mode** - Indicates the set DMX mode (**24CH**, **27CH**, **33CH**)

4 **Next:** - Indicates the channel offset to the next available DMX start address, based on the selected channel mode

5 **° C** - Indicates the illuminant temperature in °C

6 **Warning icon** - Indicates an error in one or more device component(s). Find details on current errors under **Info>Error Info**.

7 **Fan mode** - Displays the selected fan mode (**Auto**, **Off**, **Constant Low**, **Constant Mid**, **Constant High**)

8 **W-DMX settings** - Indicates the status of the wireless DMX connection (?↓ , ↯↓ , ×↓ , ↓ , ↑ , ×)

9.5 SUBMENU

9.5.1 ABOUT THE SUBMENUS

Find detailed explanations of all submenu layers in the submenu visual guide. Each section begins with a graphic showing its exact position within the menu structure, followed by tables listing the available submenu items.

- *Functional descriptions of the menu items are shown in italics* **1** .
  (This applies to the final selectable menu item in each layer.)
- Factory settings are highlighted in **bold** **2** .

Example:

Layer 3	Layer 4	Function Description
State	On	*Activates the wireless module* **1**
	Off 2	*Deactivates the wireless module* **1**

9.5.2 SUBMENU VISUAL GUIDE

9.5.2.1 CONTROL SUBMENU

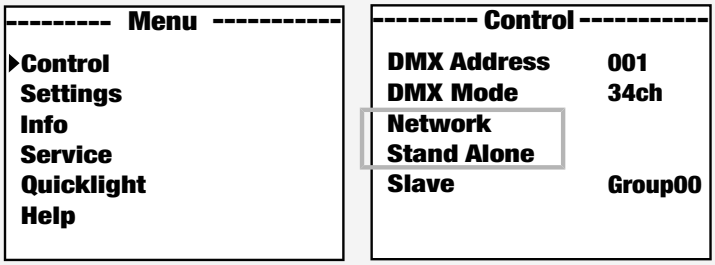

9.5.2.1.1 SUBMENU INFORMATION NETWORK ART-NET

Layer 3	Layer 4	Layer 5 */ Function Description*	
Protocol	Artnet	*Control via* Art-Net	
	sACN	*Control via* sACN	
Universe	Absolute Univ.	*Sets the absolute* Art-Net *universe*	*Depends on net, subnet, and universe*
	Net	*Sets the* Art-Net *network*	*Depends on absolute universe*
	Subnet	*Sets the* Art-Net *subnet*	
	Universe	*Sets the* Art-Net *universe*	
IP Address	xxx.xxx.xxx.xxx	*Sets the IP address*	
Subnet Mask	xxx.xxx.xxx.xxx	*Sets the subnet mask*	
Dual Input Modes	Pixel Address	*Sets the pixel start address from 001 to 4xx*	
Signal Routing	To XLR	*Relays the control signal to* XLR Out	
	Backup	*Controls via* XLR *with network signal interruption*	
	Off	*No connection between the network signal and* XLR *connectors*	

9.5.2.1.2 SUBMENU INFORMATION NETWORK SACN

Layer 3	Layer 4	Layer 5 / *Function Description*
Protocol	Artnet	*Control via* Art-Net
	sACN	*Control via* sACN
Universe	Universe	*Sets the* sACN *universe*
IP Address	xxx.xxx.xxx.xxx	*Sets the IP address*
Subnet Mask	xxx.xxx.xxx.xxx	*Sets the subnet mask*
Signal Routing	To XLR	*Relays the control signal to* XLR Out
	Backup	*Controls via* XLR *with network signal interruption*
	Off	*No connection between the network signal and* XLR *connectors*

9.5.2.1.3 SUBMENU INFORMATION STAND-ALONE

Layer 3	Layer 4	Layer 5 / Layer 6 / *Function Description*		
Master/Alone	Master	*Relays the control signal via* DMX OUT		
	Alone	*Does not relay the control signal*		
Play Scene/Loop	Scene	Scene 1 … 8	*Selects and activates the desired scene*	
	Loop	Loop 1 … 8	*Selects and activates the desired loop*	
Edit Scene	Scene 1 ... 8	Pan	*Sets each scene individually. Scenes are activated by selecting them.*	
		Tilt		
		Dimmer		
		...		
Edit Loop	Loop 1 … 8	Step	1 … 8	*Selects step 1 … 8*
		t-Step	0s … 20min	*Sets the step time*
		t-Fade	0s … 20min	*Sets the fade time*
		Scene	1 … 8	*Selects scene 1 … 8; if Step ≥ 3, "Skip Step" is additionally available*

9.5.2.2 SETTINGS MENU

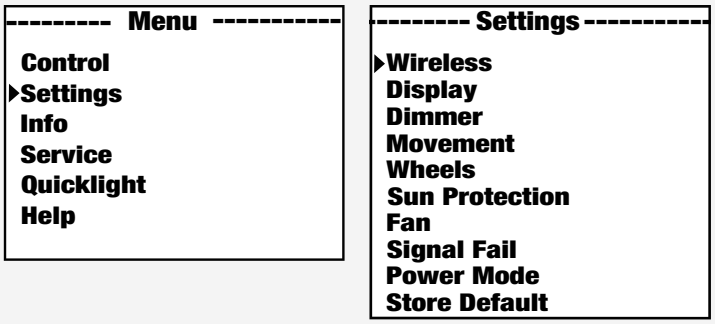

9.5.2.2.1 WIRELESS SETTINGS INFORMATION

Layer 3	Layer 4	Layer 5 / *Function Description*	
State	On	*Activates the wireless module*	
	Off	*Deactivates the wireless module*	
Operating Mode	**Receive**	*Wireless module = receiver*	
	Transmit CRMX	*Wireless module = transmitter with* CRMX *transmitter standard*	
	Transmit G4s	*Wireless module = transmitter with* G4s *transmitter standard*	
	Transmit G3	*Wireless module = transmitter with* G3 *transmitter standard*	
Linking	Mode Receive: Receive Reset	*Resets the receiver and puts it in pairing standby mode*	
	Mode Transmit: Link	*Pairs with compatible, ready-to-pair wireless devices*	
	Mode Transmit: Unlink	*Disconnects wireless* DMX *connections and places in pairing standby mode*	
Linking Key	Linking Key	*Sets the connection key*	
	CRMX Mode (only avail- able with operating mode = Receive)	**CRMX**	*Receiver standard* = CRMX
		CRMX2	*Receiver standard* = CRMX2
	CRMX Universe	**A** … H	*Selects* CRMX *universe A to H*
Universe Metadata	RGB Color Code	Red Orange Yellow Green Cyan Blue Purple White	RGB *code for colour display of the universe*

Layer 3	Layer 4		Layer 5 / *Function Description*
	Universe Name		*A 16-character string with a customisable name that identifies the universe*
Bluetooth	State	**On**	*Activates* Bluetooth®
		Off	*Deactivates* Bluetooth®
	Pin	**On**	*Activates the* PIN *request (***factory setting 081569***)*
		Off	*Deactivates the* PIN *request*
Signal Routing	**Send to XLR**		*Sends incoming signal to* XLR *connector*
	Backup by XLR		*Uses incoming signal from* XLR *connector if wireless signal is lost*
	Receive only		*No connection between wireless signal and* XLR *connectors*

9.5.2.2.2 DISPLAY SETTINGS INFORMATION

Layer 3	Layer 4	*Function Description*
Reverse	On	*180° display rotation (for example, for overhead installation)*
	Off (if Auto is not available)	*No display rotation*
	Auto	*Automatic position detection (upright/ overhead mounting)*
Off Timer	Always On	*Permanently on*
	Off after 20s	*Deactivates after approximately 20 seconds of inactivity*

9.5.2.2.3 DIMMER SETTINGS INFORMATION

Layer 3	Layer 4	*Function Description*
Curve (Dimmer Curve)	**Linear**	*Light intensity increases linearly with* DMX *value*
	Exponential	*Adjusts the light intensity finely at lower* DMX *values and broadly at higher* DMX *values*
	Logarithmic	*Adjusts the light intensity broadly at lower* DMX *values and finely at higher* DMX *values*
	S-Curve	*Adjusts the light intensity finely at lower and higher* DMX *values and broadly at medium* DMX *values*
PMW Frequency	650Hz **1530Hz** 3600Hz 12kHz 18.9kHz 25kHz	*Selects the* LED PWM *frequency*

Layer 3	Layer 4	*Function Description*
Response	**LED**	*The device responds immediately to changes of the* DMX *value*
	Halogen	*The light behaves in a similar way to a halogen light with gradual changes of brightness*

9.5.2.2.4 MOVEMENT SETTINGS INFORMATION

Layer 3	Layer 4	*Function Description*
Pan Reverse	On	*Reverses the pan direction*
	Off	*Keeps the pan direction*
Tilt Reverse	On	*Reverses the tilt direction*
	Off	*Keeps the tilt direction*
Pan Angle	630°	*Sets the maximum pan angle to 630°*
	540°	*Sets the maximum pan angle to 540°*
Position Feedback	**On**	*Enables automatic position correction*
	Off	*Disables automatic position correction*
Move in Black	On	*Blackout during head movement*
	Off	*No blackout during head movement*
Silent Movement	On	*Slowed motor movements for quieter operation*
	Off	*Disables the function*
Reset Mode	**Fast**	*Performs the reset procedure using a reduced movement range in combination with calibration values. Enables faster and more precise resetting movements.*
	Normal	*Performs the reset procedure over the entire movement range.*

9.5.2.2.5 WHEELS SETTINGS INFORMATION

Layer 3	Layer 4	Layer 5 / Layer 6 / *Function Description*	
Gobo Wheel	Position	Clockw	*Gobo Wheel rotation direction is always clockwise*
		Short	*Gobo Wheel rotates the shortest way to new position*
	Movement	**Snap**	*Gobo Wheel moves directly to centered gobo position*
		Scroll	*Gobo Wheel rotates continuously*
	Color Correction	On	*Compensates colour drift when using Gobos (must be defined individually for each fixture)*

Layer 3	Layer 4	Layer 5 / Layer 6 / *Function Description*	
		Off	*Disables compensation of colour drift when using Gobos*
Colour Wheel	Position	Clockw	*Colour Wheel rotation direction is always clockwise*
		Short	*Colour Wheel rotates the shortest way to new position*
	Movement	Snap	*Colour Wheel moves directly to centered gobo position*
		Scroll	*Colour Wheel is rotated continuously*
Move in Black	On	*Enables a blackout during Gobo and Colour Wheel movements to hide visible transitions*	
	Off	*Allows wheel movements to remain visible without triggering a blackout*	
Framing Control	**Left&Right**	*Controls the left and right sides of the blade independently to create asymmetric or freely shaped shutter positions*	
	Pan&Angle	*Adjust the blade using a single insertion position and an angle parameter for classic framing control*	

9.5.2.2.6 SUN PROTECTION SETTINGS INFORMATION

Layer 3	*Function Description*
On	*Activates blackout and directs the moving heads downward*
Off	*Disables the sun protection function*

9.5.2.2.7 FAN SETTINGS INFORMATION

Layer 3	*Function Description*
Auto	*Automatic fan control (controls fans by dimmer value and the device temperature)*
Off	*Deactivates the fans*
Constant Low	*Constant low fan speed with reduced brightness, if necessary*
Constant Mid	*Constant average fan speed with reduced brightness, if necessary*
Constant High	*Constant high fan speed*

9.5.2.2.8 SIGNAL FAIL SETTINGS INFORMATION

Layer 3	*Function Description*
Hold	*Retains the last command*
Sun Protection	*Activates Sun Protection mode if signal is lost*
Last Stand Alone	*Activates the last selected stand-alone operating mode*

Layer 3	*Function Description*
Fade to Black (10s)	*10-second fade to blackout*
Blackout	*Activates blackout*
Full	*Switches to full output if signal is lost*

9.5.2.2.9 POWER MODE SETTINGS INFORMATION

Layer 3	*Function Description*
Normal	*Units behave normally and reduce power over time as defined in the Fan Mode*
Constant	*Units cuts power as defined in the Fan Mode in order to keep a stable output during the entire usage time.*
Shapers Constant	*Units cuts power as per thermal threeshold of shaping attributes in order to keep a stable output during the entire usage time.*

9.5.2.2.10 STORE DEFAULT SETTINGS INFORMATION

Layer 3	*Function Description*
User A	*Stores all current settings at User Default A*
User B	*Stores all current settings at User Default B*
User C	*Stores all current settings at User Default C*

9.5.2.3 SYSTEM INFO MENU

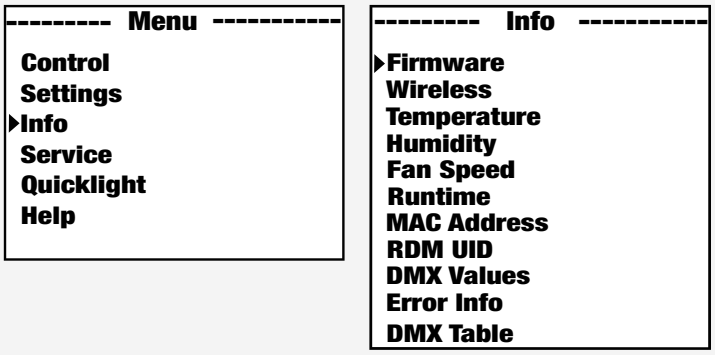

9.5.2.3.1 DEVICE INFORMATION

Layer 2	Layer 3 / Layer 4 / *Function Description*			
Firmware	DISP	vx.x.x	*Displays the firmware version of the corresponding component*	
	NET	vx.x.x		
	DRV	vx.x.x		
	...			
Wireless	Module		*Displays the wireless module model*	
	Device Name		OPUSX4PIP-xxxx	*Displays the device name*

Layer 2	**Layer 3 / Layer 4 /** ***Function Description***		
	Version	Hardware	*Hardware version number*
		Software	*Software version number*
	Link Quality	%	*Connection quality in per cent*
	Data Source	None	*Information on the data source*
		DMX	
		Wireless Link	
		SPI	
		BLE	
	Status	Operational	*Status information*
		DMX Data	
		RDM Identify	
		RF Link	
		Link State	
Temperature	LED	xxx° C / ° F	*Displays the temperature of the corresponding component*
	Base	xxx° C / ° F	
	...		
Humidity	LED	x %	*Displays the relative humidity in per cent*
	Base	X %	
	...		
Fan Speed	Fan X	*Displays the speed of the corresponding fans*	
	Fan Y		
	...		
Runtime	Total	xxxx h : xx m	*Total operating time*
	Operation	xxxx h : xx m	*Time in use*
	LED Total	xxxx h : xx m	*Lamp operating time*
	Service	xxxx h : xx m	*Operating time after resetting the service operating time*
MAC Address	xx:xx:xx:xx:xx:xx	*MAC address*	
RDM UID	RDM Unique Identifier		
DMX Values	*Displays the* DMX *values present*		
Error Info	*Displays an error in case of malfunction*		
DMX Table	*Displays* DMX *mode tables*		

9.5.2.4 SERVICE MENU

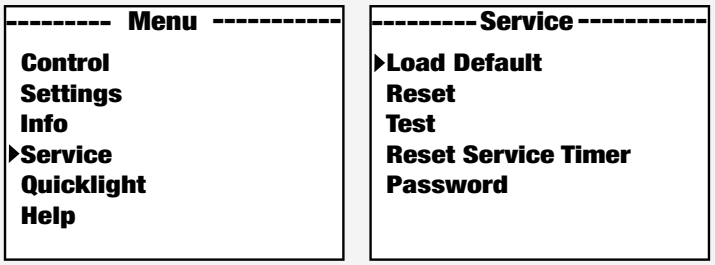

9.5.2.4.1 SERVICE FUNCTION INFORMATION

Layer 2	Layer 3	Layer 4	Layer 5 / *Function Description*	
Load Default	Factory		*Resets to factory setting*	
	User A		*Resets to user A values*	
	User B		*Resets to user B values*	
	User C		*Resets to user C values*	
Reset	Pan/Tilt		*Resets Pan and Tilt motors*	
	Head		*Resets motors in the device head*	
	All		*Resets all motors*	
Test	Test Sequence		*Pre-programmed sequence to test all components*	
	Stress Test		*Pre-programmed sequence to test all components under maximum load*	
	Motor Test		Pan	*Activates all motors individually with values of 000 to 255*
			Tilt	
			...	
Reset Service Timer	No		*Does not reset the service operation time*	
	Yes	Reset Now	*Resets the service operating time*	
Password	*For service purposes only.*			

10 FIRMWARE UPDATE



Update your device firmware using a dedicated update setup.

The update process requires:

- CLIREMOTE

The device includes detailed instructions and the required cable for performing the software update.

Further information and ordering options are available here: *UNICON® - Remote control for DMX fixtures*

11 MAINTENANCE

11.1 PRODUCT MAINTENANCE



CAUTION

Mains Voltage

Risk of electric shock

a. Before you perform maintenance work on the device, disconnect the device from all poles.



NOTICE

Damage to the device and void of warranty

a. Do not use cleaning agents, disinfectants, alcohol, or agents with abrasive effect for cleaning.

Carry out the maintenance measures listed below on a regular basis. The frequency of cleaning depends on the environment in which you use the product. Damp or dirty environments may cause increased soiling and wear.

VISUAL INSPECTION

Check the following points before operating the device.

- ⚠ **WARNING! Risk of electric shock.** Check mains power cables for damage or material fatigue.
- Check all air inlets and outlets for damage, dust, or dirt deposits.
- Check all outside screws and covers for corrosion, damage or excessive wear.
- Check all connectors and rubber sealing caps for damage, dust, or dirt deposits.
- ⚠ **WARNING! Risk of falling objects.** Check that all screws, fasteners, and rigging points are securely tightened.

CLEANING

- Clean the surface with a clean and damp lint-free cotton cloth. Wipe off all excess moisture.
- **NOTICE! Do not use compressed air.** Clean any air inlets and outlets of dust and dirt deposits with a clean and damp lint-free cotton cloth.
- Clean all plug contacts from dust and dirt with a dry lint-free cotton cloth.
- Clean the front glass of your Cameo Lighting device on a monthly basis with a clean and damp lint-free cotton cloth dampened with a 1:1 solution of water and mild detergent. Do not use alcohol, solvents or abrasives.

REPLACING GOBOS

⚠ **CAUTION! Gobos may only be replaced by skilled service personnel.**

11.2 STORING THE DEVICE

Store the device only in a dry and clean environment. If you are storing the individual components of the device, use special protective covers, bags, and cases. Find such accessories for your product in the Adam Hall Shop (https://www.adamhall.com/shop).

12 REPAIR



Do not repair the device.

a. Repairs may only be carried out by specialist personnel authorised by the manufacturer.
b. If your device is damaged or requires service, contact the Adam Hall Customer Service.

13 DISPOSAL

13.1 PACKAGING DISPOSAL



1. You can feed the packaging into the reusable material cycle using the usual disposal methods.
2. Separate the packaging in accordance with the applicable disposal laws and recycling regulations in your country

13.2 DEVICE DISPOSAL



1. This device is subject to the European Directive on Waste Electrical and Electronic Equipment, as amended. WEEE Directive Waste Electrical and Electronic Equipment. Old appliances do not belong in the household waste. The old device must be disposed of via an approved disposal company or a municipal disposal facility. Observe the applicable regulations in your country.
2. Observe all disposal laws applicable in your country.
3. As a private customer, you can obtain information on environmentally friendly disposal options from the seller of the product or the appropriate regional authorities.
4. Retailers are often legally obliged to take back items free of charge.
5. Old appliances that contain harmful substances are labelled with the symbol of a crossed-out dustbin.
6. Current information on the collection rate can be found at the following website: *https://environment.ec.europa.eu/*. Search for the following term: waste-electrical-and-electronic-equipment-weee.

OPUS® X4 Profile IP

IP65 1400W LED Spot Profile Moving Head

DMX CONTROL TABLE



NOTICE

EN: After the adjustments have been made, set the value to 000 to avoid disturbance by endless function call.

DE: Nachdem die Einstellungen vorgenommen wurden, stellen Sie den Wert auf 000 ein, um Störungen durch endlosen Funktionsaufruf zu vermeiden.

FR: Une fois les ajustements effectués, réglez la valeur sur 000 pour éviter les perturbations par appel de fonction sans fin.

ES: Después de realizar los ajustes, establezca el valor en 000 para evitar perturbaciones mediante una llamada de función sin fin.

PL: Po dokonaniu ustawień ustaw wartość na 000, aby uniknąć zakłóceń przez niekończące się wywołanie funkcji.

IT: Dopo aver effettuato le regolazioni, impostare il valore su 000 per evitare disturbi causati da una chiamata a funzione infinita.

34CH Basic	41CH Standard	56CH Extended	Function	Values	
1	1	1	Pan	000 - 255	0% to 100%
2	2	2	Pan fine	000 - 255	
3	3	3	Tilt	000 - 255	0% to 100%
4	4	4	Tilt fine	000 - 255	
5	5	5	Dimmer	000 - 255	0% to 100%
	6	6	Dimmer fine	000 - 255	
6	7	7	Strobe Functions	000 - 005	Open
				006 - 010	Closed
				011 - 022	Ramp up/down slow to fast
				023 - 033	Ramp up/down random slow to fast
				034 - 045	Ramp up slow to fast
				046 - 056	Ramp up random slow to fast
				057 - 068	Ramp down slow to fast
				069 - 079	Ramp down random slow to fast
				080 - 102	Random Strobe effect slow to fast
				103 - 127	Strobe Break effect 5s to 1s (Short burst with break)
				128 - 250	Strobe slow to fast (<1Hz to 20Hz)
				251 - 255	Open
				000 - 005	All segments on
				006 - 177	Fade Sparkle FX in 0 - 100%
				178 - 180	Only LED segment 1 on
				181 - 183	Only LED segment 2 on

OPUS® X4 Profile IP

IP65 1400W LED Spot Profile Moving Head

DMX CONTROL TABLE

		8	LED-segment Dim	184	-	186	Only LED segment 3 on
				187	-	189	Only LED segment 4 on
				190	-	192	Only LED segment 5 on
				193	-	195	Only LED segment 6 on
				196	-	198	Only LED segment 7 on
				199	-	201	Only LED segment 8 on
				202	-	204	Only LED segment 9 on
				205	-	207	Only LED segment 1 & 2 & 3 on
				208	-	210	Only LED segment 4 & 5 & 6 on
				211	-	213	Only LED segment 7 & 8 & 9 on
				214	-	216	Only LED segment 1 & 3 & 5 & 7 & 9 on
				217	-	219	Only LED segment 2 & 4 & 6 & 8 on
				220	-	222	Only LED segment 1 & 9 on
				223	-	225	Only LED segment 2 & 8 on
				226	-	228	Only LED segment 3 & 7 on
				229	-	231	Only LED segment 4 & 5 on
				232	-	234	Only LED segment 1 & 2 on
				235	-	237	Only LED segment 2 & 3 on
				238	-	240	Only LED segment 3 & 4 on
				241	-	243	Only LED segment 4 & 5 on
				244	-	246	Only LED segment 5 & 6 on
				247	-	249	Only LED segment 6 & 7 on
				250	-	252	Only LED segment 7 & 8 on
				253	-	255	Only LED segment 8 & 9 on
		9	Sparkle FX	000	-	005	No function
				006	-	020	Chaser 1 jump (slow to fast)
				021	-	035	Chaser 2 jump (slow to fast)
				036	-	050	Chaser 3 jump (slow to fast)
				051	-	065	Chaser 4 jump (slow to fast)
				066	-	080	Chaser 5 jump (slow to fast)
				081	-	095	Chaser 6 jump (slow to fast)
				096	-	110	Chaser 7 jump (slow to fast)
				111	-	125	Chaser 8 jump (slow to fast)
				126	-	140	Chaser 1 fade (slow to fast)
				141	-	155	Chaser 2 fade (slow to fast)
				156	-	170	Chaser 3 fade (slow to fast)
				171	-	185	Chaser 4 fade (slow to fast)
				186	-	200	Chaser 5 fade (slow to fast)
				201	-	215	Chaser 6 fade (slow to fast)
				216	-	230	Chaser 7 fade (slow to fast)
				231	-	245	Chaser 8 fade (slow to fast)
				246	-	255	No function
7	**8**	**10**	Cyan	000	-	255	0% to 100%
		11	Cyan fine	000	-	255	
8	**9**	**12**	Magenta	000	-	255	0% to 100%

OPUS® X4 Profile IP

IP65 1400W LED Spot Profile Moving Head

DMX CONTROL TABLE

		13	Magenta fine	000	-	255	0% to 100%
9	10	14	Yellow	000	-	255	0% to 100%
		15	Yellow fine	000	-	255	
10	11	16	CTO	000	-	255	0% to 100%
		17	CTO fine	000	-	255	
11	12	18	Colour Wheel 1	000	-	000	Open
				001	-	031	Open -> Deep Red
				032	-	032	Deep Red
				033	-	063	Deep Red -> Medium Blue
				064	-	064	Medium Blue
				065	-	095	Medium Blue -> Deep Green
				096	-	096	Deep Green
				097	-	127	Deep Green -> Amber
				128	-	128	Amber
				129	-	159	Amber -> Deep Blue
				160	-	160	Deep Blue
				161	-	191	Deep Blue -> Open
				192	-	192	Open
				193	-	223	Color Wheel Rotation fast to slow
				224	-	224	Color Wheel Rotation stop
				225	-	255	Color Wheel Rotation slow to fast (backwards)
12	13	19	Colour Wheel 2	000	-	000	Open
				001	-	031	Open -> CTO 2600K
				032	-	032	CTO 2600K
				033	-	063	CTO 2600K -> CTO 3200K
				064	-	064	CTO 3200K
				065	-	095	CTO 3200K -> CTB 7500K
				096	-	096	CTB 7500K
				097	-	127	CTB 7500K -> CTB 9000K
				128	-	128	CTB 9000K
				129	-	159	CTB 9000K -> High CRI
				160	-	160	High CRI
				161	-	191	High CRI -> Open
				192	-	192	Open
				193	-	223	Color Wheel Rotation fast to slow
				224	-	224	Color Wheel Rotation stop
				225	-	255	Color Wheel Rotation slow to fast (backwards)
				000	-	005	Open
				006	-	023	Open -> Gobo1
				024	-	024	Gobo 1
				025	-	042	Gobo 1 -> Gobo 2
				043	-	043	Gobo 2
				044	-	061	Gobo 2 -> Gobo 3

OPUS® X4 Profile IP

IP65 1400W LED Spot Profile Moving Head

DMX CONTROL TABLE

13	14	20	Gobo Wheel 1	062	-	062	Gobo 3
				063	-	080	Gobo 3 -> Gobo 4
				081	-	081	Gobo 4
				082	-	099	Gobo 4 -> Gobo 5
				100	-	100	Gobo 5
				101	-	118	Gobo 5 -> Gobo 6
				119	-	119	Gobo 6
				120	-	137	Gobo 6 -> Open
				138	-	142	Open
				143	-	149	Gobo 1 Shake (slow -> fast)
				150	-	156	Gobo 2 Shake (slow -> fast)
				157	-	163	Gobo 3 Shake (slow -> fast)
				164	-	170	Gobo 4 Shake (slow -> fast)
				171	-	177	Gobo 5 Shake (slow -> fast)
				178	-	184	Gobo 6 Shake (slow -> fast)
				185	-	192	Open
				193	-	223	Gobo Wheel rotation fast to slow
				224	-	224	Gobo Wheel rotation Stop
				225	-	255	Gobo Wheel rotation slow to fast (backwards)
14	15	21	Gobo Wheel 1 Gobo Position	000	-	128	Gobo Position 0° ... 540°
				129	-	191	Gobo Rotation fast to slow
				192	-	192	Gobo Rotation Stop
				193	-	255	Gobo Rotation slow to fast (backwards)
	16	22	Gobo Wheel 1 Gobo Position fine	000	-	255	Gobo Position fine
15	17	23	Gobo Wheel 2	000	-	005	Open
				006	-	023	Open -> Gobo1
				024	-	024	Gobo 1
				025	-	042	Gobo 1 -> Gobo 2
				043	-	043	Gobo 2
				044	-	061	Gobo 2 -> Gobo 3
				062	-	062	Gobo 3
				063	-	080	Gobo 3 -> Gobo 4
				081	-	081	Gobo 4
				082	-	099	Gobo 4 -> Gobo 5
				100	-	100	Gobo 5
				101	-	118	Gobo 5 -> Gobo 6
				119	-	119	Gobo 6
				120	-	137	Gobo 6 -> Open
				138	-	142	Open
				143	-	149	Gobo 1 Shake (slow -> fast)
				150	-	156	Gobo 2 Shake (slow -> fast)
				157	-	163	Gobo 3 Shake (slow -> fast)
				164	-	170	Gobo 4 Shake (slow -> fast)

OPUS® X4 Profile IP

IP65 1400W LED Spot Profile Moving Head

DMX CONTROL TABLE

				171	-	177	Gobo 5 Shake (slow -> fast)
				178	-	184	Gobo 6 Shake (slow -> fast)
				185	-	192	Open
				193	-	223	Gobo Wheel rotation fast to slow
				224	-	224	Gobo Wheel rotation Stop
				225	-	255	Gobo Wheel rotation slow to fast (backwards)
16	18	24	Gobo Wheel 2 Gobo Position	000	-	128	Gobo Position 0° ... 540°
				129	-	191	Gobo Rotation fast to slow
				192	-	192	Gobo Rotation Stop
				193	-	255	Gobo Rotation slow to fast (backwards)
	19	25	Gobo Wheel 2 Gobo Position fine	000	-	255	Gobo Position fine
17	20	26	Zoom	000	-	255	Narrow to Wide
		27	Zoom fine	000	-	255	
18	21	28	Focus	000	-	255	0% to 100%
	22	29	Focus fine	000	-	255	
	23	30	Auto Focus	000	-	005	No function
				006	-	036	3m
				037	-	067	5m
				068	-	098	10m
				099	-	129	15m
				130	-	160	20m
				161	-	191	30m
				192	-	222	50m
				223	-	255	100m
	24	31	Auto Focus Adjust	000	-	255	Auto Focus Adjustment
19	25	32	Iris	000	-	191	Open to Close
				192	-	200	Pulse slow to fast (with Dim)
				201	-	209	Pulse slow to fast (without Dim)
				210	-	218	Pulse Random slow to fast (without Dim)
				219	-	227	Ramp up slow to fast (with Dim)
				228	-	236	Ramp up slow to fast (without Dim)
				237	-	245	Ramp down slow to fast (with Dim)
				246	-	255	Ramp down slow to fast (without Dim)
20	26	33	Prism Selection	000	-	005	No Prism
				006	-	130	Prism 1 (5-face circular)
				131	-	255	Prism 2 (8-face circular)
21	27	34	Prism Rotation	000	-	128	Prism Position 0° to 540°
				129	-	191	Prism Rotation fast to slow
				192	-	192	Prism Rotation Stop
				193	-	255	Prism Rotation slow to fast (backwards)
22	28	35	Frost	000	-	000	No Frost
				001	-	128	0% to 100% Light Frost
				129	-	129	No Frost

OPUS® X4 Profile IP

IP65 1400W LED Spot Profile Moving Head

DMX CONTROL TABLE

				130	-	255	0% to 100% Medium Frost
23	29	36	Animation Wheel	000	-	255	Animation Wheel In 0 - 100%
24	30	37	Animation Wheel Rotation	000	-	128	Animation Wheel Position 0° to 540°
				129	-	191	Animation Wheel Rotation fast to slow
				192	-	192	Animation Wheel Rotation Stop
				193	-	255	Animation Wheel Rotation slow to fast (backwards)
25	31	38	Blade 1A	000	-	255	0% - 100%
		39	Blade 1A fine	000	-	255	
26	32	40	Blade 1B	000	-	255	0% - 100%
		41	Blade 1B fine	000	-	255	
27	33	42	Blade 2A	000	-	255	0% - 100%
		43	Blade 2A fine	000	-	255	
28	34	44	Blade 2B	000	-	255	0% - 100%
		45	Blade 2B fine	000	-	255	
29	35	46	Blade 3A	000	-	255	0% - 100%
		47	Blade 3A fine	000	-	255	
30	36	48	Blade 3B	000	-	255	0% - 100%
		49	Blade 3B fine	000	-	255	
31	37	50	Blade 4A	000	-	255	0% - 100%
		51	Blade 4A fine	000	-	255	
32	38	52	Blade 4B	000	-	255	0% - 100%
		53	Blade 4B fine	000	-	255	
33	39	54	Shape Rotation	000	-	255	0% - 100%
	40	55	Shape Rotation fine	000	-	255	
				000	-	005	No function
				006	-	007	Blackout while P/T moving On
				008	-	009	Blackout while P/T moving Off
				010	-	011	Blackout while Wheels moving On
				012	-	013	Blackout while Wheels moving Off
				014	-	015	Sun Protection On
				016	-	017	Sun Protection Off
				018	-	019	Sleep Mode On
				020	-	021	Sleep Mode Off/Wake Up
				022	-	024	No function
				025	-	025	Record Scene 1
				026	-	026	Record Scene 2
				027	-	027	Record Scene 3
				028	-	028	Record Scene 4
				029	-	029	Record Scene 5
				030	-	030	Record Scene 6
				031	-	031	Record Scene 7
				032	-	032	Record Scene 8
				033	-	041	No function
				042	-	043	Invert Pan On

OPUS® X4 Profile IP

IP65 1400W LED Spot Profile Moving Head

DMX CONTROL TABLE

34	**41**	**56**	Device settings (All settings executed are after holding value for 3 seconds)	044	-	045	Invert Pan Off
				046	-	047	Invert Tilt On
				048	-	049	Invert Tilt Off
				050	-	051	Pan Angle 540°
				052	-	053	Pan Angle 630°
				054	-	073	No Function
				074	-	075	Dimmer Response LED
				076	-	077	Dimmer Response Halogen
				078	-	085	No function
				086	-	087	Power Mode Normal
				088	-	089	Power Mode Constant
				090	-	091	Power Mode Shapers Constant
				092	-	093	No function
				094	-	095	Silent movement On
				096	-	097	Silent movement Off
				098	-	099	Fan Auto
				100	-	101	Fan Off
				102	-	103	Fan Constant Low
				104	-	105	Fan Constant Medium
				106	-	107	Fan Constant High
				108	-	119	No function
				120	-	121	PWM 1 (650 Hz)
				122	-	123	PWM 2 (1530 Hz)
				124	-	125	PWM 3 (3600 Hz)
				126	-	127	PWM 4 (12000 Hz)
				128	-	129	PWM 5 (18900 Hz)
				130	-	131	PWM 6 (25000 Hz)
				132	-	139	No function
				140	-	141	Display Always On
				142	-	143	Display Off after 20s
				144	-	147	No function
				148	-	149	Color Wheel Snap
				150	-	151	Color Wheel Scroll
				152	-	153	Gobo Wheel Snap
				154	-	155	Gobo Wheel Scroll
				156	-	157	Gobo Color Correction On
				158	-	159	Gobo Color Correction Off
				160	-	161	No Function
				162	-	163	No Function
				164	-	165	Dimmer Curve Linear
				166	-	167	Dimmer Curve Exponential
				168	-	169	Dimmer Curve Logarithmic
				170	-	171	Dimmer Curve S-Curve
				172	-	209	No function
				210	-	211	Color Wheel Shortest Way

OPUS® X4 Profile IP

IP65 1400W LED Spot Profile Moving Head

DMX CONTROL TABLE

				212	-	213	Color Wheel Clockwise
				214	-	215	Gobo Wheel Shortest Way
				216	-	217	Gobo Wheel Clockwise
				218	-	219	Framing Control Left & Right
				220	-	221	Framing Control Position & Angle
				222	-	223	Reset Pan / Tilt
				224	-	233	No function
				234	-	235	Reset Head
				236	-	237	Reset All
				238	-	239	No function
				240	-	241	Load Factory Defaults
				242	-	243	No Function
				244	-	245	Load User Default A
				246	-	247	Load User Default B
				248	-	249	Load User Default C
				250	-	255	no function

9007199641577227