USER MANUAL

cameo®

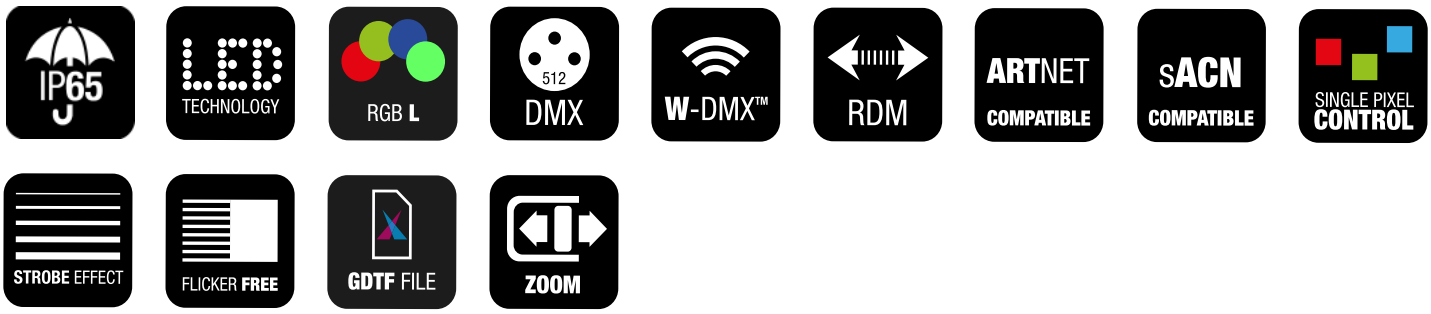



OTOS® LC12

IP65 MOTORISED LED BAR

CLOTOSLC12;

en-GB

TABLE OF CONTENTS

1 DOCUMENT VERSION AND REVISIONS 6

2 INTRODUCTION 7

2.1 You Made the Right Choice! 7

2.2 Contacts 7

2.3 Link to the Download Centre 7

2.4 Visualisation Conventions in This User Manual 7

3 PRODUCT COMPLIANCE 9

3.1 Manufacturer's Declaration 9

3.2 Declaration of Conformity 9

4 SAFETY INSTRUCTIONS 11

4.1 Intended Use 11

4.2 Explanation of Safety and Warning Symbols 11

4.3 Structure of Warning Messages 12

4.4 General Safety 12

4.5 Electrical Safety 13

4.6 Physical Safety 13

4.7 Thermal Safety 14

4.8 Wireless Safety 14

4.9 Device Safety 15

5 PRODUCT DESCRIPTION 16

5.1 Product Overview 16

5.2 Technical Data 16

5.3 User Interface 17

6 GENERAL INFORMATION 19

6.1 About DMX Technology 19

6.1.1 DMX Standard 19

6.1.2 DMX Connection 19

6.1.2.1 Connecting Multiple Fixtures 19

6.1.3 Pin Assignment 19

6.1.4 DMX Terminators 19

6.1.5 DMX Adapters 20

6.2 Explanation of the IP Rating 20

7 PREPARATION 22

7.1 Scope of Delivery 22
7.2 Transport 22
7.2.1 Installing the Tilt Lock Cover 22
7.2.2 Connecting Multiple Devices 23
8 INSTALLATION 25
8.1 Omega Bracket Mounting Mechanism Overview 25
8.2 Attaching One Omega Bracket 25
8.3 Attaching Two Omega Brackets 26
9 OPERATION 28
9.1 Power Supply 28
9.1.1 Turning the Device On or Off 28
9.1.2 Disconnecting a Mains Power Cable 28
9.2 Device Navigation 29
9.2.1 Using the Control Panel 29
9.2.2 Activating / Deactivating Autolock 29
9.2.3 Using the Battery-powered Display 30
9.3 Device Configuration 30
9.3.1 Setting the DMX Start Address 30
9.3.2 Setting the IP Address 30
9.3.3 Setting the Subnet Mask 31
9.3.4 Setting the Stand-Alone Mode 31
9.3.5 Setting the Slave Mode 31
9.3.6 Pairing a Wireless DMX Receiver with a Transmitter 32
9.3.7 About Linking Key 32
9.3.8 Pairing a Wireless DMX Receiver with a Transmitter via Linking Key 32
9.3.9 Unlinking a Wireless DMX Receiver from a Transmitter 33
9.3.10 Configuring Quicklight 33
9.4 Main Screen Overviews 34
9.4.1 Wireless DMX Status 34
9.4.2 Main Screen DMX Modes / W-DMX Modes 34
9.4.3 Art-Net + DMX Operating Mode Overview 35
9.4.4 Main Screen Stand-alone Modes 36
9.4.5 Main Screen Slave Mode 36
9.5 Submenus 37
9.5.1 About the Submenus 37
9.5.2 Control Menu 37
9.5.2.1 Network Art-Net Submenu Layers 37

9.5.2.2 Network sACN Submenu Layers 38
9.5.2.3 Stand-Alone Submenu Layers 38
9.5.3 Settings Menu 39
9.5.3.1 Wireless Submenu Layers 39
9.5.3.2 Display Submenu Layers 40
9.5.3.3 Dimmer Submenu Layers 41
9.5.3.4 Colour Calibration Submenu Layers 41
9.5.3.5 Movement Submenu Layers 41
9.5.3.6 Fan Submenu Layers 42
9.5.3.7 Sun Protection Submenu Layers 42
9.5.3.8 Signal Fail Submenu Layers 42
9.5.3.9 Pixel Mirror Submenu Layers 42
9.5.4 Service Menu 43
9.5.4.1 Service Function Submenu Layers 43
9.5.5 System Info Menu 43
9.5.5.1 System Info Submenu Layers 44
10 MAINTENANCE 46
10.1 Product Maintenance 46
10.2 Firmware Update 47
10.3 Storing the Device 47
11 REPAIR 48
12 DISPOSAL 49
12.1 Packaging Disposal 49
12.2 Device Disposal 49
13 DMX CONTROL TABLE 50
INDEX 109

1 DOCUMENT VERSION AND REVISIONS

Version	Date	Implemented changes
v1.0	02/2026	Original version

2 INTRODUCTION

2.1 YOU MADE THE RIGHT CHOICE!

This product has been developed and manufactured to the highest quality standards to ensure many years of problem-free operation. Find further information about Cameo on our website: www.cameolight.com

2.2 CONTACTS

	Adam Hall GmbH Headquarter	Customer Service
E-mail	info@adamhall.com	customerservice@adamhall.com
Phone	+49 6081 9419-0	+49 6081 941973-0
Street	Adam-Hall-Str. 1	Adam-Hall-Str. 1
Postal code / city	61267 Neu-Anspach	61267 Neu-Anspach
Website	*www.adamhall.com*	*www.adamhall.com*

2.3 LINK TO THE DOWNLOAD CENTRE

You can download some information, such as CAD data or technical data, from the Download Centre. Scan the QR code or click the link to download this information:

2.4 VISUALISATION CONVENTIONS IN THIS USER MANUAL

In this manual we use graphical symbols and icons in certain contexts. Find below a table with explanations and use cases of the graphical symbols and icons.

Icon / Symbol	Designation	Context	Explanation / Example
↙	**Prerequisite**	Tasks	Used in task topics to indicate a prerequisite that must be met before beginning the task.
⇨	**Result / Intermediate Result**	Tasks	Used in task topics to indicate a result or intermediate result of an action step.
1 Step **a)** Substep	**1 Action Step** **a) Substep**	Tasks	Used in task topics to indicate action steps and substeps.
1	**Callout**	Graphics; tasks	Text-image reference or labeling of certain functions on the device

Icon / Symbol	Designation	Context	Explanation / Example
[...]	**Value range indicator**	Technical data; paragraphs; lists	Indicates the range of a value, such as "Compressor ratio: **1:1...20:1**". Mostly used in tables or callouts.
*	**Asterisk**	Paragraphs; tables	Indicates additional information in a footnote.
The **LIM** LED lights up	**General User Interface element**	Paragraphs; tasks; tables; lists	The words presented in this way represent graphic user interface elements on the device.
PAGE button	**Key / Button**	Paragraphs; tasks; tables; lists	The words presented in this way represent user interface controls on the device.
`<name>`	**User input**	Paragraphs; tasks; tables; lists	The words presented in this way represent required user inputs.
https://adamhall.com	**Weblink**	Paragraphs; tables; lists	External link to a website

3 PRODUCT COMPLIANCE

3.1 MANUFACTURER'S DECLARATION

Adam Hall offers a voluntary, EU-wide manufacturer's guarantee of 2 years. The statutory warranty period is not affected by this voluntary guarantee.
Visit the Adam Hall Service Portal to access the **Download Centre**:
https://portal.adamhall.com/
Under the **Service & Regulations** section, you find our current detailed manufacturer's declarations, warranty conditions, and limitation of liability.
To request warranty for a product, please contact:
Adam Hall GmbH, Adam-Hall-Str. 1, 61267 Neu-Anspach
customerservice@adamhall.com
0049 (0)6081 / 9419-1000

3.2 DECLARATION OF CONFORMITY

Hereby, Adam Hall Ltd. declares that this product meets the following guidelines (where applicable)

- Electrical Equipment (Safety) Regulations 2016
- Electromagnetic Compatibility Regulations 2016 (SI 2016/1091)
- The Restriction of the Use of Certain Hazardous Substances in Electrical and Electronic Equipment Regulation 2012 (SI 2012/3032)
- Radio Equipment Regulations 2017 (SI 2016/2015)

Products that are subject to Electrical Equipment(Safety)Regulation 2016, EMC Regulation 2016 or RoHS Regulation can be requested at info@adamhall.com. Products that are subject to the Radio Equipments Regulations 2017 (SI2017/1206) can be downloaded at *http://www.adamhall.com/compliance*.

FCC STATEMENT

This device complies with part 15 of the FCC Rules. Operation is subject to the following two conditions:

1. This device may not cause harmful interference.
2. This device must accept any interference received, including interference that may cause undesired operation.

⚠CAUTION! RF Exposure Information: This equipment complies with FCC radiation exposure limits set forth for an uncontrolled environment. This equipment should be installed and operated with minimum distance 20 cm between the radiator and your body.

⚠CAUTION! Any changes or modifications to this device not explicitly approved by the manufacturer could void your authority to operate this equipment.

This equipment has been tested and found to comply with the limits for a Class B digital device, pursuant to part 15 of the FCC Rules. These limits are designed to provide reasonable protection against harmful interference in a residential installation. This equipment generates, uses and can radiate radio frequency energy and, if not installed and used in accordance with the instructions, may cause harmful interference to radio communications. However, there is no guarantee that interference will not occur in a particular

installation. If this equipment does cause harmful interference to radio or television reception, which can be determined by turning the equipment off and on, the user is encouraged to try to correct the interference by one or more of the following measures:

- Reorient or relocate the receiving antenna.
- Increase the separation between the equipment and receiver.
- Connect the equipment into an outlet on a circuit different from that to which the receiver is connected to.
- Consult the dealer or an experienced radio/TV technician for help.

ISED STATEMENT

This device contains licence-exempt transmitter(s)/receiver(s) that comply with Innovation, Science and Economic Development Canada's licence-exempt RSS(s). Operation is subject to the following two conditions:

1. This device may not cause interference.
2. This device must accept any interference, including interference that may cause undesired operation of the device.

The digital apparatus complies with Canadian CAN ICES-005 (B)/NMB-005(B).

This equipment complies with IC RSS-102 radiation exposure limits set forth for an uncontrolled environment. This equipment should be installed and operated with minimum distance 20 cm between the radiator and your body.

This device meets the exemption from the routine evaluation limits in section 2.5 of RSS 102 and compliance with RSS 102 RF exposure, users can obtain Canadian information on RF exposure and compliance.

4 SAFETY INSTRUCTIONS

4.1 INTENDED USE

The **OTOS® LC12** is intended for use as a motorised lighting device to generate controllable light output and movement in event and entertainment environments.
This product has been developed for the professional use in the field of event technology. Furthermore it is intended for qualified users with specialist knowledge of event technology only.
This product is intended for mobile applications and not for fixed installations.
This product is intended for temporary outdoor use only.
This product is not suitable for domestic use.
Do not use the product outside the operating conditions as stated in the user manual under Technical Data. Liability for damage and third-party damage to persons and property due to inappropriate use is excluded.
This product is not suitable for children and persons with limited physical, sensory, or mental capabilities or lack of experience and knowledge.

4.2 EXPLANATION OF SAFETY AND WARNING SYMBOLS

Find the following safety and warning symbols on the device, the user manual, or the packaging:


This symbol indicates that you must read the complete user manual before using the product.


This symbol indicates a general hazardous situation.


This symbol indicates hazards that can cause electric shock.


This symbol indicates hazards caused by hot surfaces.


This symbol indicates tripping hazards.


This symbol indicates hazards due to corrosive substances.


This symbol indicates hazards due to toxic substances.


This symbol indicates hazards due to leaking batteries.


This symbol indicates pinching hazards.


This symbol indicates hazards due to overhead loads.



This symbol indicates hazards due to optical radiation

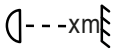

This symbol indicates the minimum distance in meters (m) between the light head and the illuminated surface. Find the corresponding value for this device under Technical Data in the complete user manual and as imprint on the housing of the device.



This symbol indicates that the product is not suitable for household use.



This symbol indicates that the product has no serviceable parts. Only authorized personnel is allowed to perform maintenance or service work.



This symbol indicates helpful hints or additional information.

4.3 STRUCTURE OF WARNING MESSAGES

In this user manual, warning messages are structured with a safety symbol, a signal word, a hazard description, and instructions on how to avoid injuries or death.



DANGER

Indicates a hazardous situation which will result in death or serious injury.



WARNING

Indicates a hazardous situation which could result in death or serious injury



CAUTION

Indicates a hazardous situation which could result in minor or moderate injury.



NOTICE

Indicates situations or conditions that could result in damage to property and/or the environment.

4.4 GENERAL SAFETY





- Read this document carefully.
- Keep this document for later reference.
- Follow closely the instructions in this document.
- This document is an integral part of the product. If you sell or pass on the product, you must include this document.
- Only use this product according to its intended use.
- Risk of choking. Keep small parts away from children and individuals with impaired physical, sensory, or mental capabilities.
- Risk of suffocation. Keep plastic bags away from children and individuals with impaired physical, sensory, or mental capabilities.
- Observe all safety instructions and warning messages in this document, on the device, and on the packaging.

- Products are subject to continuous further development. If you find discrepancies between this document and the product labeling, the information on the product always takes priority.
- Do not remove safety instructions or warning messages from the product.
- Do not open the device.
- Do not modify the product.
- If the product shows any sign of damage, do not use it.
- Do not operate the product with removed or missing covers.
- Do not expose the product to direct sunlight.
- If not further specified in the user manual under Technical Data, do not use the product in ambient temperatures that exceed 45 °C / 113 °F or fall below -15 °C / 4 °F
- Do not use the product in tropical climate.
- Do not use the product above 2000 metres of altitude.
- Unless otherwise stated, do not use the product under marine conditions.
- Use only accessories specified by the manufacturer.
- Maintenance and repairs may only be carried out by authorized service personnel.
- Store and transport the product in a dry and safe environment.
- Clean the product on a regular basis. If applicable, see the user manual for maintenance intervals.
- If the device was exposed to strong temperature changes, such as during transport, do not switch it on immediately. Wait until the device has reached ambient temperature.

4.5 ELECTRICAL SAFETY



- This is an electrical device in protection class I. Make sure that the protective conductor is connected to electrical earth. Do not disconnect the protective conductor.
- Do not bypass the mains fuse.
- Use only mains fuses as specified by the manufacturer.
- Do not use kinked or otherwise damaged power cables.
- Only operate the device on compliant, tested and intact mains power outlets.
- Make sure that the voltage and frequency of the mains power match the values specified by the manufacturer.
- Take suitable measures against overvoltage, such as lightning strikes.
- For devices with a power out connector, make sure the total current consumption of all connected devices does not exceed the value specified by the manufacturer.
- This device is not suitable for continuous current.
- Disconnect the device from all poles before maintenance, repair or extend periods of non-use.
- Permanently connected power cables may only be replaced by a qualified service technician.

4.6 PHYSICAL SAFETY



- Make sure that all mounting connections are adequately dimensioned. Observe the relevant regional safety guidelines when mounting the device.



- Make sure that the device and any accessories are securely positioned. Secure against unintentional movement.
- Check all load-bearing screw connections regularly and replace them if necessary.
- Check all cable routes to prevent tripping accidents.





- Moving components, such as mounting brackets, pose a risk of pinching injuries.
- Devices with motor-driven components, such as moving lights, pose a risk of injury due to the movement of the appliance.

4.7 THERMAL SAFETY



- Do not install the device near heat sources, such as radiators or ovens.
- Do not block any ventilation openings.
- Unless otherwise stated, keep a minimum clearance of at least 20 centimetres around the device.
- Unless otherwise stated, keep flammable materials, such as paper or wood, at least 50 centimetres away from the device
- Risk of burning. The device housing can become very hot during normal operation. Make sure that the housing cannot be touched accidentally. Allow the device to cool down sufficiently before dismantling, maintenance work, transport, or charging.
- Always adhere to the minimum distance to the illuminated surface, as stated on the device.

4.8 WIRELESS SAFETY



Risk of injury and damage to devices. Do not use W-DMX™ transmissions for safety-relevant applications, such as DMX-controlled motors, DMX-controlled hydraulic systems, or comparable moving components. Do not use W-DMX™ transmissions for pyrotechnic devices, gas effects, or liquid effects. This includes CO2 cannons, confetti shooters, and similar effects.

Radio transmitter operation is subject to official regulations. Make sure you adhere to regional guidelines before commissioning.

Radio operation can lead to potentially dangerous effects. Do not use this device in sensitive areas such as:

- Hospitals, health centres or other healthcare facilities that provide patient treatment with skilled personnel and equipment
- Explosive atmospheres, including:
  - ATEX zones (Zone 0, 1, 2, 20, 21, 22) (EU)
  - Hazardous Locations Class I, II and III (US/Canada)
- Restricted areas
- Military facilities
- Areas where the use of mobile phones is prohibited, such as aircrafts.



Quality and performance of wireless signal transmissions is dependent on the environmental conditions. All range specifications refer to free-field application with visual contact without interference. Range and signal stability may be influenced by:

- Shielding, such as masonry, metal buildings, or water
- Interference
- High radio traffic, such as strong W-LAN networks
- Electromagnetic radiation, such as LED video walls or dimmers

4.9 DEVICE SAFETY

- Do not switch the device on and off in quick succession, because this will shorten the device lifetime.
- Do not lift the device by the head or the yoke. Only lift the device by the base carrying handles.
- Do not expose the device to direct sunlight, laser radiation, and bundled light beams from other spotlights to prevent damage to the housing and internal components.
  - Use the device's sunlight protection via DMX.

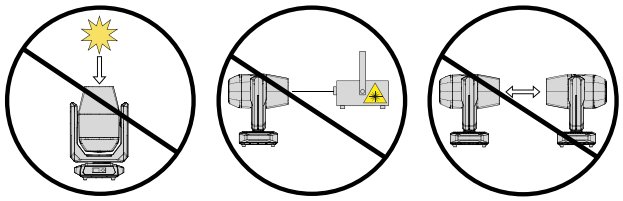

5 PRODUCT DESCRIPTION

5.1 PRODUCT OVERVIEW

The **OTOS® LC12** has the following features:

- 12 individually tiltable and zoomable 50 W moving heads with RGBL colour mixing system
- Tilt range per head: 206° (+/- 103°) – for dynamic motion effects
- Zoom range per head (single lens zoom) for flexible lighting desig
- Integrated FX strip (such as L16 and OTOS Wash FX rings)
- Creates linear curve effects for kinetic beam looks and eye-catching front light
- 1,800–10,000 K CCT range, CRI > 85
- IP65 protection for outdoor and touring applications
- Quick-lock mechanism and strategically placed handles for efficient handling

5.2 TECHNICAL DATA

PHOTOMETRIC VALUES

Parameter	Value
Illuminant type	RGBL LED
Luminous flux	6700 lm
LED PWM frequency	650 Hz, 1,530 Hz, 3,600 Hz, 12 kHz, 25 kHz, 18.9 kHz
Dimmer resolution	16 Bit
Dimmer curves	Linear, Exponential, Logarithmic, S curve

COLOURS

Parameter	Value
LED colours	Red, Green, Blue, Lime
Correlated colour temperature (CCT)	1800 K ... 10000 K
Halogen simulation redshift/DTW	Yes
Calibration	User defined calibration, smart calibration

MOVEMENT

Parameter	Value
Tilt	206 °

CONTROL

Parameter	Value
Controller protocols	DMX512, CRMX, W-DMX™ (Transceiver), RDM, sACN, Art-Net
Data in connector	XLR 5-pole male

MAINS OPERATION

Parameter	Value
Operation voltage	100 V AC … 240V AC / 50 Hz … 60 Hz
Rated power	770 W
Mains connector	Mains plug device outdoor male & TRUE1®
Power out connector	Mains plug device outdoor female & TRUE1®

HOUSING

Parameter	Value
Cabinet material	Magnesium
Colour	Black

COOLING

Parameter	Value
Cooling system	Fan cooling
Cooling modes	Auto, Off, Constant High, Constant Mid, Constant Low

ENVIRONMENTAL

Parameter	Value
Protection class	IP65
Risk group	2
Ambient temperature	-15 ... 45 °C

DIMENSIONS & WEIGHT

Parameter	Value
Width	1000 mm
Height	330 mm
Depth	187 mm
Weight	31.5 kg

5.3 USER INTERFACE

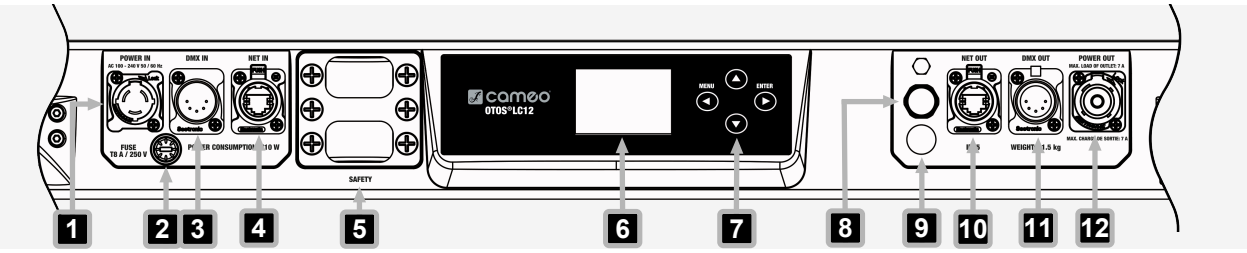

1 **POWER IN** - IP65 mains power socket. When not in use, seal with rubber sealing cap.

2 **Fuse Holder (IP65, incl. 5 × 20 mm FUSE T8 A / 250 V**) - Protects the device against overcurrent and overvoltage. Only replace the fuse with fuses of the same type and value, as specified under Technical Data. Reseal the fuse holder to ensure IP65 seal.

3 **DMX IN** - Male IP65 5-pin XLR socket for connection of an DMX control device. When not in use, seal with rubber sealing cap.

4 **NET IN** - RJ45 network input connector to Art-Net or sACN network. When not in use, seal with rubber sealing cap.

5 **SAFETY** - Safety cable socket

6 **LC - Display** - Main graphic display

7 **Touch-sensitive controls menu** - Opens the menu structure and navigates the device.

8 **Pressure equalisation element** - Prevents condensation inside the device housing. Keep clean and do not cover.

9 **Wireless DMX Antenna** - Enables wireless DMX control.

10 **NET OUT** - RJ45 network output connector to Art-Net or sACN network. When not in use, seal with rubber sealing cap.

11 **DMX OUT** - Female IP65 5-pin XLR socket for relay of DMX control signal. When not in use, seal with rubber sealing cap.

12 **POWER OUT** - IP65 mains power output socket. Enables power supply to other **CAMEO** devices. Make sure that the total current consumption of all connected devices does not exceed the value specified on the device. When not in use, seal with rubber sealing cap.

6 GENERAL INFORMATION

6.1 ABOUT DMX TECHNOLOGY

6.1.1 DMX STANDARD

DMX (Digital Multiplex) is a universal transmission protocol for sending a serial data stream from controllers to fixtures. DMX is the common 'language' used to control a large number of fixture types and models from different manufacturers. Fixtures can be connected with one another and controlled via a central controller.

6.1.2 DMX CONNECTION

The DMX data stream is forwarded from one connected fixture to the next via the DMX input and DMX output connectors (3-pin XLR or 5-pin XLR). The maximum number of fixtures in the chain must not exceed 32 units. The last fixture in the chain must be equipped with a terminating resistor (terminator).
For optimum data transmission, it is necessary to keep the connecting cables between the individual fixtures as short as possible. The order in which the devices are integrated in the DMX network has no influence on the addresses.

6.1.2.1 CONNECTING MULTIPLE FIXTURES

1. Connect the male XLR connector (3-pin or 5-pin) of the DMX cable to the DMX output (female XLR socket) of the DMX controller.
2. Connect the female XLR connector (3-pin or 5-pin) of the DMX cable to the DMX input (male XLR socket) of the first fixture.
3. Daisy chain all other fixtures in the same way by connecting the DMX output (female XLR socket) to the DMX input (male XLR socket) of the next fixture.

> The maximum number of fixtures in the chain must not exceed 32 units.

6.1.3 PIN ASSIGNMENT

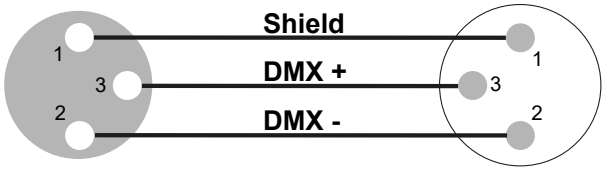

DMX cable with 3-pin XLR connectors

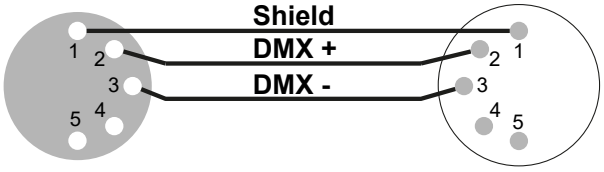

DMX cable with 5-pin XLR connectors (pin 4 and 5 are not used)

6.1.4 DMX TERMINATORS

The last fixture in a DMX chain needs to be equipped with a terminating resistor (120 Ω, 0,25 W) to prevent system errors.

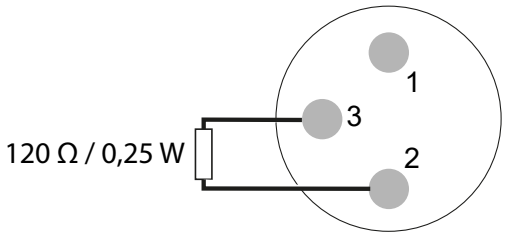

DMX Terminator 3-pin

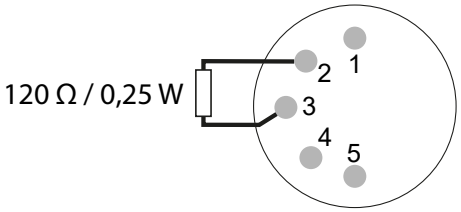

DMX Terminator 5-pin

6.1.5 DMX ADAPTERS

The combination of DMX fixtures with 3-pin connections and DMX fixtures with 5-pin connections in a DMX chain is possible with suitable adapters.

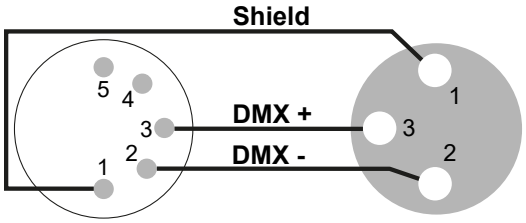

DMX Adapter 5-pin XLR male to 3-pin XLR female

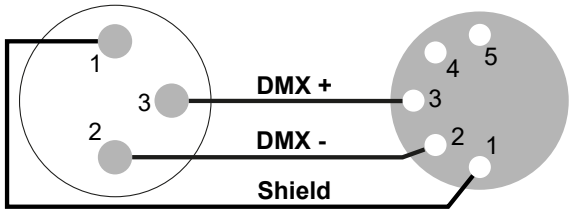

DMX Adapter 3-pin XLR male to 5-pin XLR female

6.2 EXPLANATION OF THE IP RATING

The IP rating or ingress protection code indicates how well a device is protected against water, dust, solid foreign objects, and contact with hazardous parts.

IP Rating does not describe general bad weather resistance.

The first identification digit indicates the level of protection against the ingress from dust, solid foreign bodies and contact with hazardous parts:

IP2X	Protection against solid foreign bodies ≥ 12.5 mm in diameter
IP3X	Protection against solid foreign bodies ≥ 2.5 mm in diameter
IP4X	Protection against solid foreign bodies ≥ 1.0 mm in diameter
IP5X	Protection against dust in harmful quantities and completely protected against contact.
IP6X	Dust-tight and completely protected against contact from solid foreign bodies

Table 1: IP Rating - First identification digit

The second identification digit indicates the level of protection against the ingress from water:

IPX0	No protection
IPX1	Protection against dripping water
IPX2	Protection against dripping water when the device is tilted up to 15°
IPX3	Protection against falling spray water up to 60° from the vertical
IPX4	Protection against splashing water on all sides
IPX5	Protection against water jets (nozzle) from any angle
IPX6	Protection against strong water jets
IPX7	Protection against temporary immersion and ingress of water in harmful quantity

Table 2: IP Rating - Second identification digit

7 PREPARATION

7.1 SCOPE OF DELIVERY

Item Description	Quantity
Device	1
Mains power cable	1
Omega bracket	2
Tilt lock cover	1
Safety Compliance Information	1

7.2 TRANSPORT

7.2.1 INSTALLING THE TILT LOCK COVER

✓ You have powered off the device so all lamps are in an unlocked state.

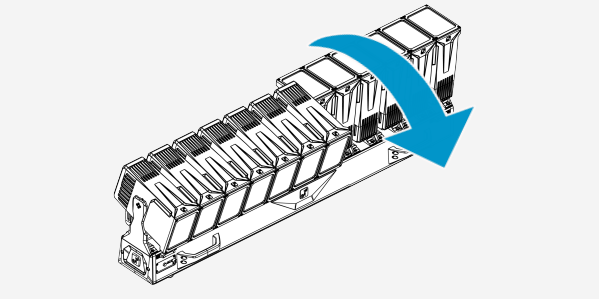

1 Tilt all 12 moving heads toward the same side in the tilt direction until they reach their mechanical end stop.

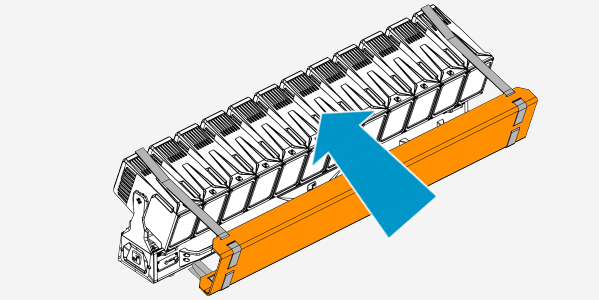

2 Place the Tilt Lock Cover over the light outputs of the 12 moving heads.

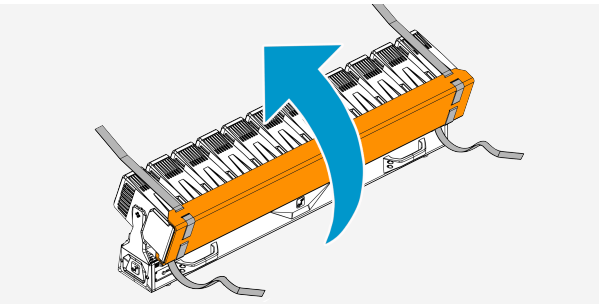

3 Turn the Tilt Lock cover together with the 12 moving heads into a vertical position.

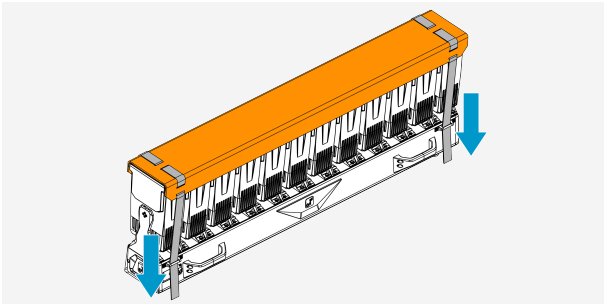

4 Pull each of the four straps downward through the corresponding eyelets at the base of the **OTOS® LC12**.

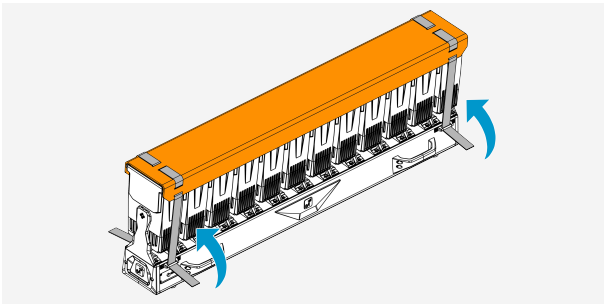

5 Pass each of the four straps around its corresponding eyelet and pull it upward firmly.

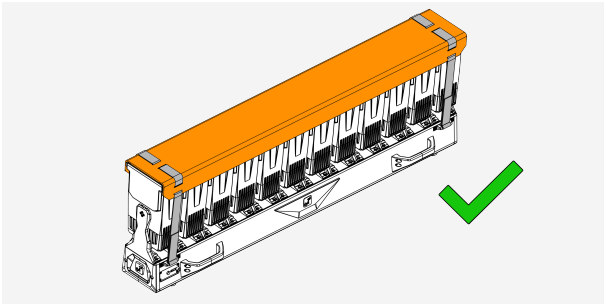

6 Press the hook-and-loop area of each of the four straps onto its matching counterpart.

7.2.2 CONNECTING MULTIPLE DEVICES

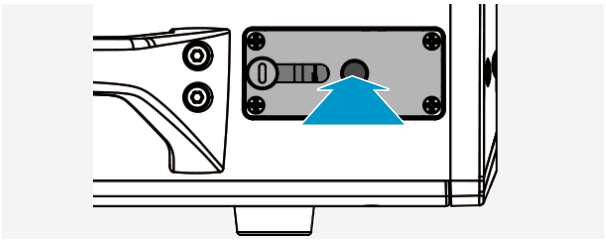

1 Press the release button.
⇨ The pin is released from its locking position.

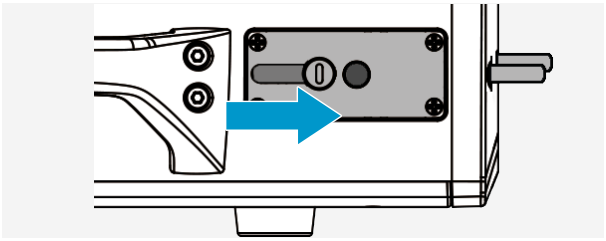

2 Slide the bolt on the handle outward until it locks into place.
⇨ The release button pops out, indicating the pin is securely locked.

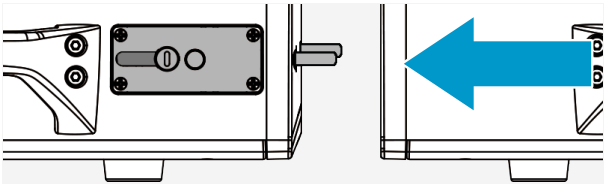

3 Align the fixtures and bring them together.

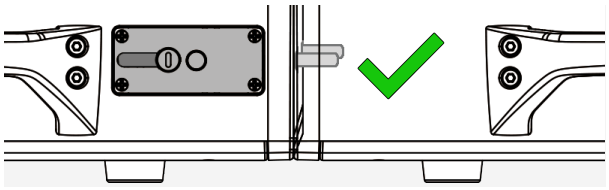

4 Insert the pins into the matching holes.
⇨ The devices are connected and protected against shifting.

8 INSTALLATION

8.1 OMEGA BRACKET MOUNTING MECHANISM OVERVIEW



1 **Mounting bolt lever**

2 **Mounting bolt**

3 **Protrusion**

8.2 ATTACHING ONE OMEGA BRACKET

WARNING

Falling object

Risk of serious injury

a. Observe all regional safety regulations concerning overhead loads.
b. Make sure that the device is securely mounted.
c. Make sure that the mounting accessory supports the weight of the device.
d. Before any assembly, check that all mounting bracket components are complete, undamaged and work correctly.

CAUTION

Pinching Hazard

Risk of Injury

a. Be cautious while attaching the brackets. Handle with care to avoid injury.

NOTICE

Tilt Lock Cover missing during installation

Risk of damage to the device.

a. Keep the Tilt Lock Cover in its designated mounting position on the device until the device is installed in its final position.

✓ The device is powered off.

✓ The Tilt Lock Cover is mounted.

1 Place the device on its side.

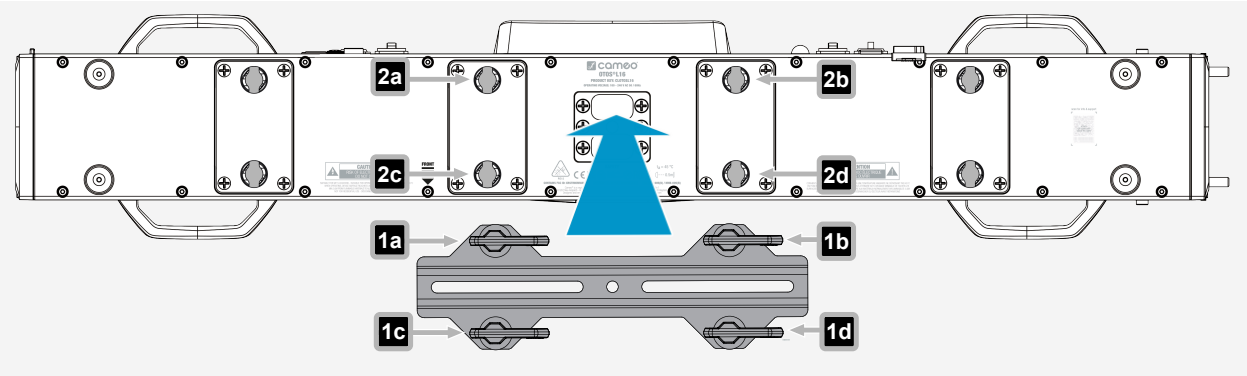

2 Align the mounting bolts of the omega bracket with the mounting points on the bottom of the device.

3 Make sure that the protrusions on the bolts **1** fit into the recesses of the mounting points **2**.

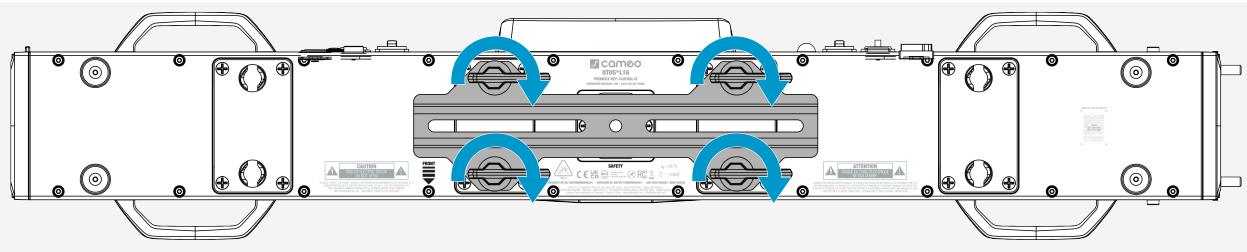

4 Turn the mounting bolt levers clockwise until they are tight.

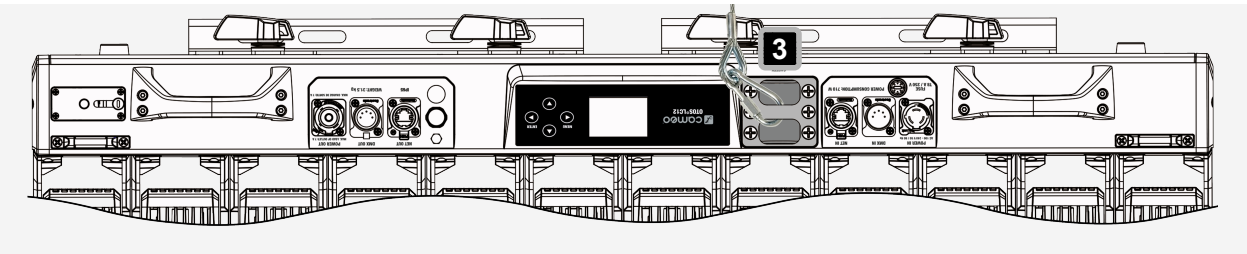

5 Attach the safety cable to the securing lug **3**.

Suitable truss clamps are sold separately.

8.3 ATTACHING TWO OMEGA BRACKETS

WARNING

Falling object

Risk of serious injury

a. Observe all regional safety regulations concerning overhead loads.
b. Make sure that the device is securely mounted.
c. Make sure that the mounting accessory supports the weight of the device.
d. Before any assembly, check that all mounting bracket components are complete, undamaged and work correctly.

CAUTION

Pinching Hazard

Risk of Injury

a. Be cautious while attaching the brackets. Handle with care to avoid injury.

NOTICE

Tilt Lock Cover missing during installation

Risk of damage to the device.

a. Keep the Tilt Lock Cover in its designated mounting position on the device until the device is installed in its final position.

✓ The device is powered off.

✓ The Tilt Lock Cover is mounted.

1 Place the device on its side.

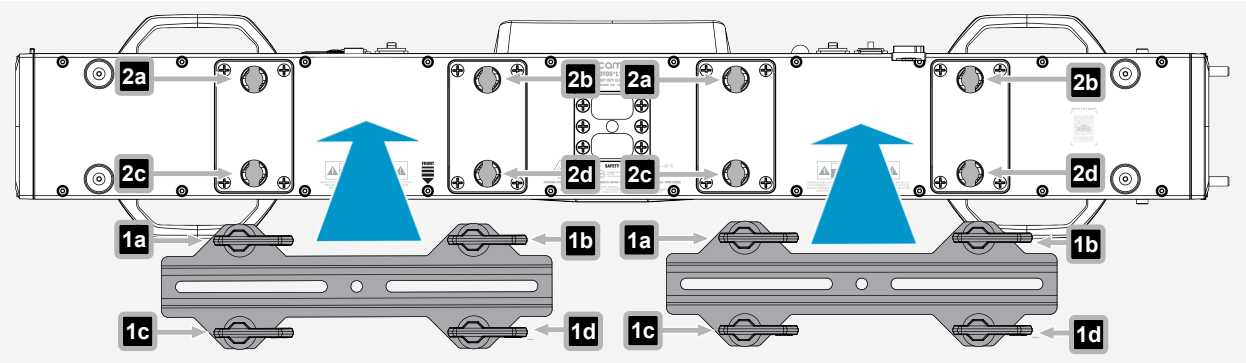

2 Align the mounting bolts of the omega brackets with the mounting points on the bottom of the device.

3 Make sure that the protrusions on the bolts **1** fit into the recesses of the mounting points **2**.

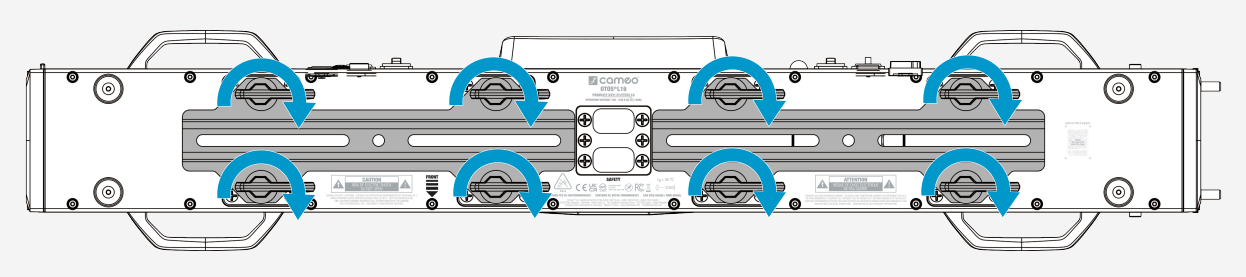

4 Turn the mounting bolt levers clockwise until they are tight.

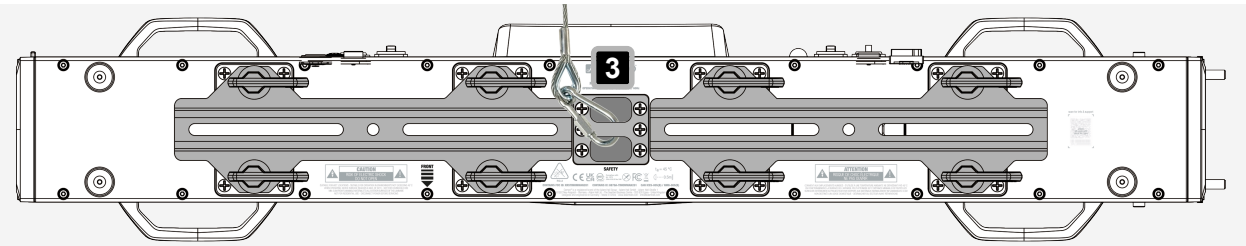

5 Attach the safety cable to the securing lug **3**.

Suitable truss clamps are sold separately.

9 OPERATION

9.1 POWER SUPPLY

9.1.1 TURNING THE DEVICE ON OR OFF

WARNING

Mains voltage

Risk of electric shock

a. Do not use kinked or damaged mains power cables.

NOTICE

Damage to the device

a. Make sure that the voltage of the mains power socket matches the device operating voltage.

b. Do not plug the device under load.

1 Plug the device power connector into the device. Make sure the bayonet connector is positioned correctly.

2 Turn the bayonet connector clockwise to lock it.

3 Plug the mains power connector into the mains power socket.

⇨ The display turns on, the device boots, and performs a sequence of moves.

⇨ After a few seconds, the device is operational.

9.1.2 DISCONNECTING A MAINS POWER CABLE

NOTICE

Damage to the Device

a. Make sure that the voltage of the mains power socket matches the device operating voltage.

b. Use only supplied power cables or original Neutrik powerCON® TRUE1 cables. Otherwise you must not plug or unplug the device under load.

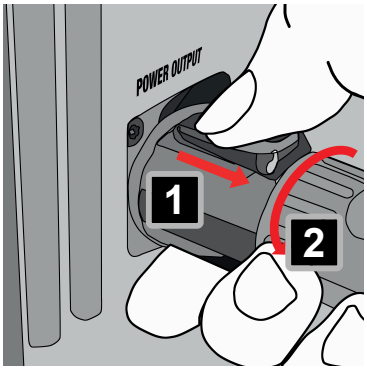

1 Disconnect the mains power connector of the mains power cable from the mains power socket.

2 Pull the locking lever of the bayonet connector backwards and hold it. 1

3 Turn the bayonet connector anticlockwise. 2

4 Pull the bayonet connector out of the socket.

9.2 DEVICE NAVIGATION

9.2.1 USING THE CONTROL PANEL

NOTICE

Control panel dirty or damp
Functionality impaired
a. Make sure that the control panel is dry and clean.
b. After configuring the device, activate the **Autolock** function in the settings.

OPERATION WITH ACTIVATED AUTOLOCK FUNCTION

Press and hold ▲ and ▼ simultaneously for approximately 5 seconds to operate the device.

1 Press **MENU** / ◀ to access the main menu.
2 Press ▲ or ▼ to navigate through the menu items.
3 Press **ENTER** / ▶ to access a submenu or to change the value of a menu item.
4 Press ▲ or ▼ to change the value of a menu item.
5 Press **MENU** / ◀ to return to the next higher menu layer or the main display.

The selected menu item appears as the header of the new view, as shown in this example.

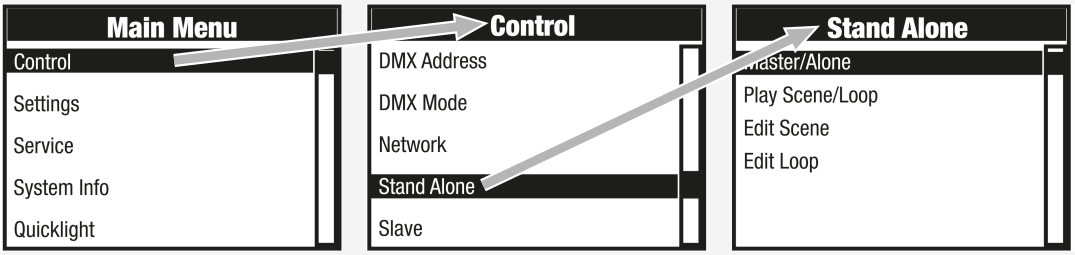

9.2.2 ACTIVATING / DEACTIVATING AUTOLOCK

The **Autolock** function prevents malfunctions caused by moisture or dirt on the control panel. Find below instructions for activating the autolock function.

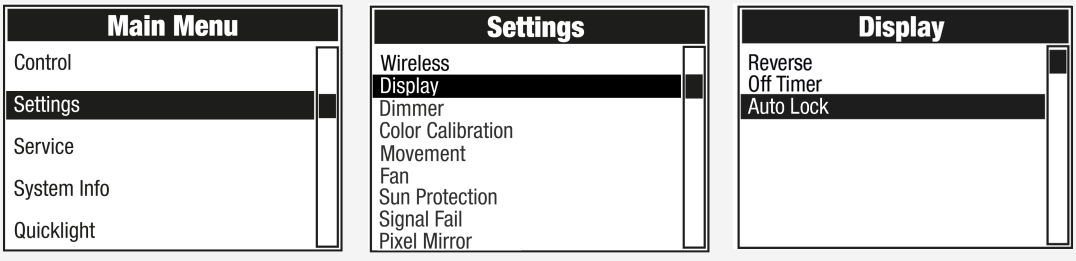

1 In the main menu, choose **Settings**>**Display**>**Auto Lock**.
2 Use the control panel to adjust the settings.
   a) Choose **On after 60s** to automatically lock the controls if there is no input for 60 seconds.
   b) Choose **Off** to deactivate the autolock function
3 Press **ENTER** or ▶ to confirm.

9.2.3 USING THE BATTERY-POWERED DISPLAY

The device has a battery-powered display. The battery-powered display allows to access and change settings without a power supply.

> When using the battery-powered display, all external device controls are deactivated. The main display indicates that there is no control signal.

1 Press and hold **MENU** / ◀ for approximately 10 seconds.
   ⇨ The display turns on.
2 Make the required settings.

9.3 DEVICE CONFIGURATION

9.3.1 SETTING THE DMX START ADDRESS

⚠ **WARNING!** Risk of eye damage. As soon as the DMX start address is entered, the device may immediately activate if a DMX signal is present and may cause glare.

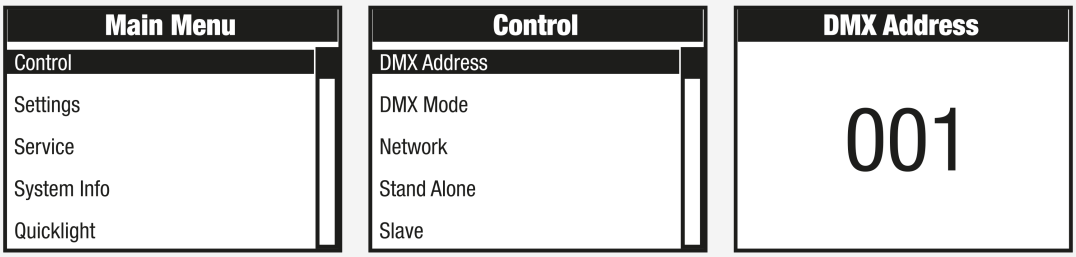

1 In the main menu, choose **Control**>**DMX Address**.
2 Use the control panel to adjust the desired DMX start address.
3 Press **ENTER** or ▶ to confirm.

9.3.2 SETTING THE IP ADDRESS

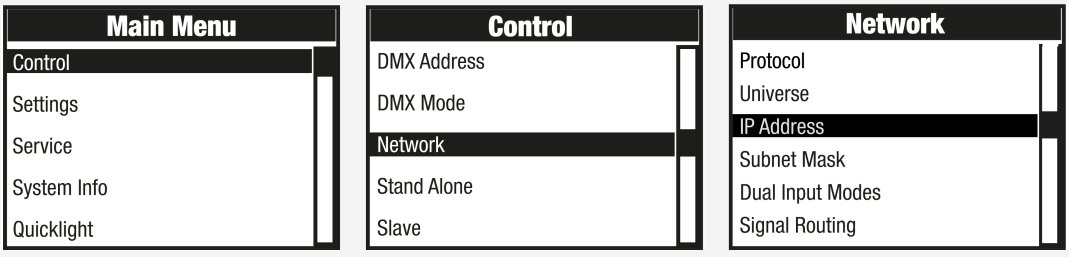

1 In the main menu, choose **Control**>**Network**>**IP Address**.
2 Use the control panel to adjust the settings block by block from left to right.
   a) Enter the values for each block.
   b) Press confirm to move to the next block.
3 Press **ENTER** or ▶ to confirm.

9.3.3 SETTING THE SUBNET MASK

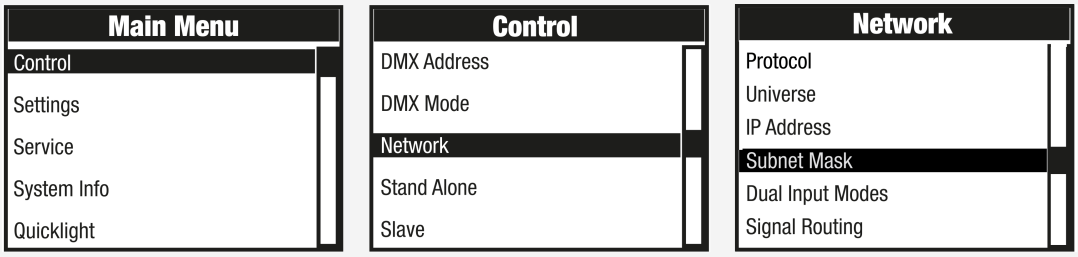

1 In the main menu, choose **Control**>**Network**>**Subnet Mask**.
2 Use the control panel to adjust the settings block by block from left to right.
   a) Enter the values for each block.
   b) Press confirm to move to the next block.
3 Press **ENTER** or ▶ to confirm.

9.3.4 SETTING THE STAND-ALONE MODE

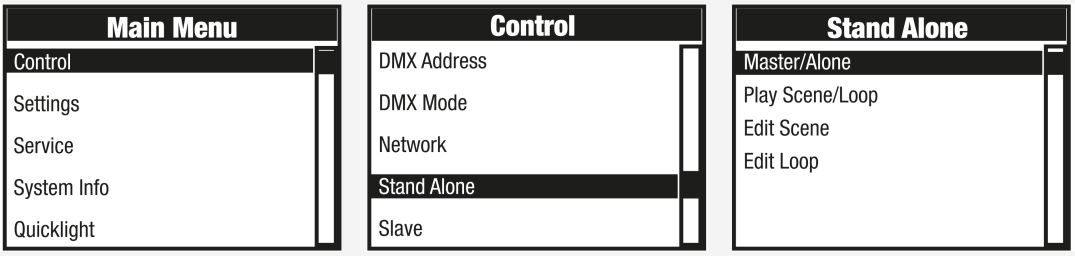

1 In the main menu, choose **Control**>**Stand Alone**.
2 Use the control panel to adjust the settings.
   a) Choose **Master/Alone**>**Master** to output the control signal to slave fixtures via XLR.
   b) Choose **Master/Alone**>**Alone** to deactivate the control signal output.
   c) Choose **Play Scene/Loop**>**Play Scene** to activate one of the eight available scenes (Scene 1–8).
   d) Choose **Play Scene/Loop**>**Play Loop** to activate one of the eight available scenes (Scene 1–8).
   e) Choose **Edit Scene** to customise a pre-programmed scene.
   f) Choose **Edit Loop** to customise a pre-programmed loop.
3 Press **ENTER** or ▶ to confirm.

9.3.5 SETTING THE SLAVE MODE

✓ You have activated the control signal output in the master unit by navigating to: **Control**>**Stand Alone**>**Master/Alone**>**Master**.

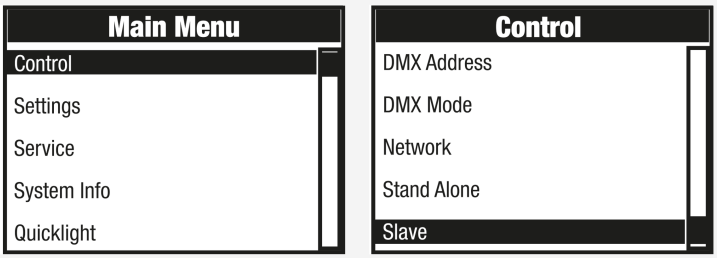

1 In the main menu, choose **Control**>**Slave**.
2 Press **ENTER** or ▶ to confirm.

9.3.6 PAIRING A WIRELESS DMX RECEIVER WITH A TRANSMITTER

✓ The transmitter and the receiver are located within the same wireless operating range.

1 In the receiver's menu, select **Settings**>**Wireless**>**Operation mode**>**Receive**
2 In the receiver's menu, select **Settings**>**Wireless**>**Linking**>**Receive Reset**.
⇨ The receiver is now ready to pair and waiting for a pairing request.
3 In the transmitter's menu, select **Settings**>**Wireless**>**Operation mode**>**Transmit CRMX/G4/G3**.
4 In the transmitter`s menu select **Settings**>**Wireless**>**Linking**>**Link**.
⇨ The receiver and transmitter will pair automatically.
⇨ The wireless DMX link between fixtures remains active until it is manually disconnected.

ⓘ Repeat steps 1 and 2 for each receiver you want to connect to a single transmitter.

9.3.7 ABOUT LINKING KEY

A **Linking Key** is an eight-digit numerical code used to pair wireless DMX transmitters and receivers in lighting fixtures. The key always consists of exactly eight characters, and all eight positions must be filled. Each position can contain any digit from 0 to 9.

9.3.8 PAIRING A WIRELESS DMX RECEIVER WITH A TRANSMITTER VIA LINKING KEY

✓ The transmitter and the receiver are located within the same wireless operating range.

1 In the receiver's menu, select **Settings**>**Wireless**>**Operation mode**>**Receive**.
2 In the receiver's menu, select **Settings**>**Wireless**>**Linking**>**Linking Key**.
3 Enter the user-defined `Linking Key`.

ⓘ The same key must be set on both the transmitter and the receiver.

4 In the transmitter's menu, select **Settings**>**Wireless**>**Operation mode**>**Transmit CRMX/G4/G3**.
5 In the transmitter`s menu select **Settings**>**Wireless**>**Linking Key**.
6 Enter the same `Linking Key` as on the receiver.
⇨ The receiver and transmitter will pair automatically once both devices share the same **Linking Key**.
⇨ The wireless DMX link between fixtures remains active until it is manually disconnected.

Repeat the process for each receiver to pair several receivers to one transmitter (such as for master/slave operation).

9.3.9 UNLINKING A WIRELESS DMX RECEIVER FROM A TRANSMITTER

There are two ways to disconnect the wireless DMX link:

UNLINK FROM THE RECEIVER

1 On the device configured as the receiver, select **Reset** to remove the existing pairing.
   ⇨ The receiver is now unlinked and ready for a new pairing if needed.

UNLINK FROM THE TRANSMITTER

2 On the device configured as the transmitter, select **Unlink** to disconnect all paired receivers from the transmitter.

After performing either option, the wireless DMX connection is fully disconnected. The devices will not reconnect automatically unless paired again.

9.3.10 CONFIGURING QUICKLIGHT

Create a static lighting scene directly on the device without using an external controller or DMX console. By defining these basic settings, the **OTOS® LC12** will maintain the configured position and light output.

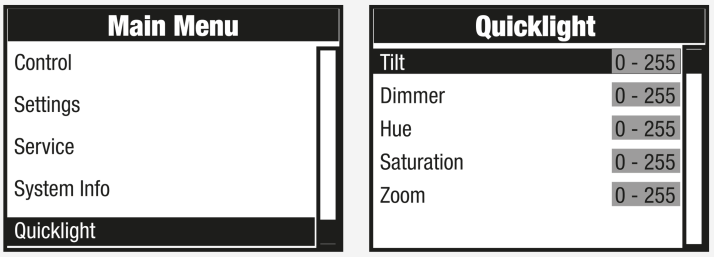

1 In the main menu, choose **Quicklight**.
2 Use the control panel to adjust the settings:
   a) **Tilt**: Choose a value between 0 and 255 to set the vertical angle of the head (0 = lowest position, 255 = highest position).
   b) **Dimmer**: Choose a value between 0 and 255 to set the light intensity (0 = off, 255 = maximum brightness).
   c) **Hue**: Choose a value between 0 and 255 to set the base color (0 = starting color, 255 = end of color range).
   d) **Saturation**:Choose a value between 0 and 255 to adjust the color saturation (0 = no color saturation, 255 = full saturation).
   e) **Zoom**: (Beam size) Choose a value between 0 and 255 to adjust the beam angle (0 = narrow beam, 255 = wide beam).
3 Press **ENTER** or ▶ to confirm.

9.4 MAIN SCREEN OVERVIEWS

NOTICE

Interrupted control signal

Device functionality may be limited or fail completely and is indicated by flashing central characters.

a. Check and reconnect the control signal to restore functionality.

The flashing will stop automatically once the signal is restored.

9.4.1 WIRELESS DMX STATUS

The display uses a set of icons to indicate the current status of the W-DMX functionality. The following legend explains the different states represented by these icons.

- W-DMX deactivated
- W-DMX activated as receiver; not paired
- W-DMX activated as receiver and paired; transmitter is switched off or out of range
- W-DMX activated as receiver and paired; no DMX signal
- W-DMX activated as receiver and paired; DMX signal present
- W-DMX activated as transmitter

9.4.2 MAIN SCREEN DMX MODES / W-DMX MODES

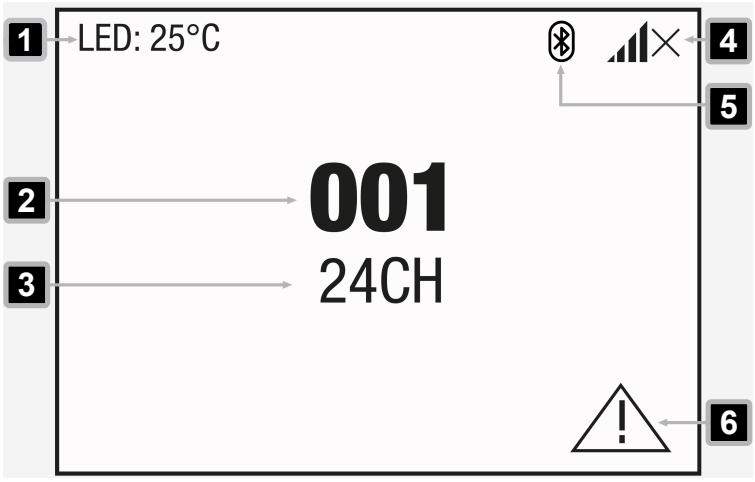

1 **LED Temperature** - Illuminant temperature in °C or °F.
Change the displayed temperature unit under **System Info** > **Temperature**.

2 **DMX Start Address** - Indicates the set DMX start address. Flashing: Signal interrupted (for operating modes with external control).

3 **DMX Mode** - Indicates the set DMX mode (**24CH**, **25CH**, **42CH**, **48CH**, **54CH**, **126CH**, **175CH**). Flashing: Signal interrupted (for operating modes with external control)

4 **Wireless DMX Status** - Indicates the status of the wireless DMX connection. See About Wireless DMX Status for possible status indications.

5 ᛒ - Indicates that Bluetooth® is activated.

6 **Error Message** - Indicates an error in one or more device component(s). Find details on current errors under **System Info** > **Error Info**.

9.4.3 ART-NET + DMX OPERATING MODE OVERVIEW

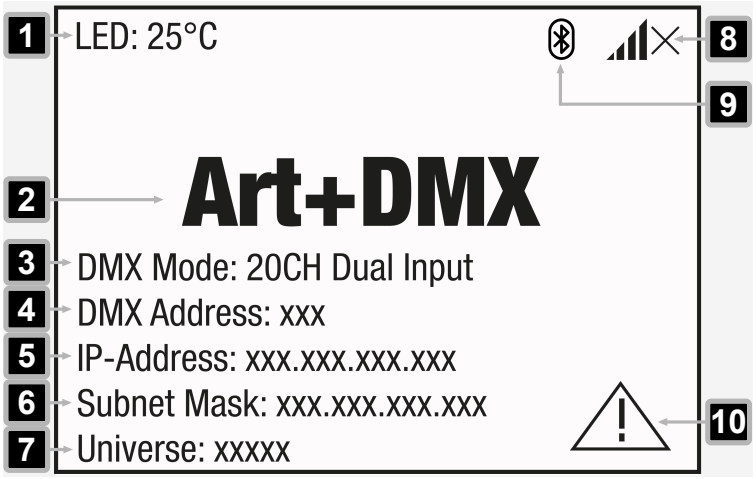

1 **LED Temperature** - Illuminant temperature in °C or °F.

Change the displayed temperature unit under **System Info** > **Temperature**.

2 **Status Control Protocol** - Displays the currently active control protocol or protocol combination (**Artnet / sACN**, **Art+DMX**, **sACN+DMX**)

3 **DMX Mode** - Indicates the set DMX mode (**24CH**, **25CH**, **42CH**, **48CH**, **54CH**, **126CH**, **175CH**).

4 **DMX Address** - Indicates the set DMX start address.

5 **IP-Address** - Indicates the set IP address.

6 **Subnet Mask** - Indicates the set subnet mask.

7 **Universe** - Indicates the set universe.

8 **Wireless DMX Status** - Indicates the status of the wireless DMX connection. See About Wireless DMX Status for possible status indications.

9 ᛒ - Indicates that Bluetooth® is activated.

10 **Error Message** - Indicates an error in one or more device component(s). Find details on current errors under **System Info** > **Error Info**.

9.4.4 MAIN SCREEN STAND-ALONE MODES

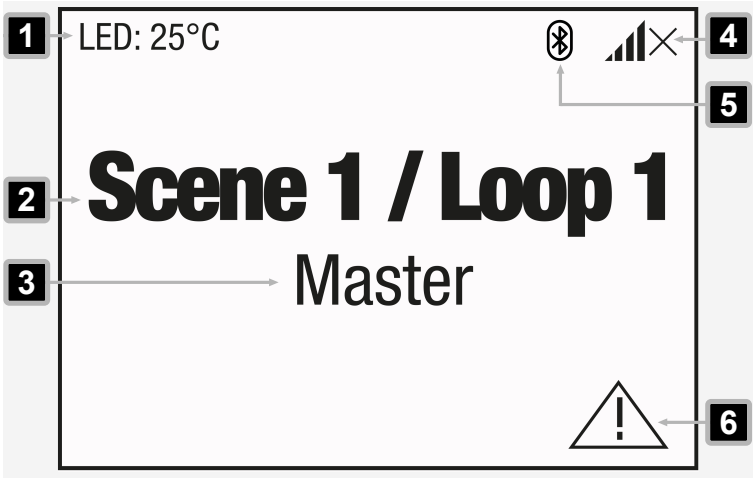

1 **LED Temperature** - Illuminant temperature in °C or °F.
Change the displayed temperature unit under **System Info** > **Temperature**.

2 **Scene X / Loop X** - Selected scene (1…8) and selected loop (1…8).

3 **Stand-alone Operating Mode** - Indicates the set stand-alone operating mode (**Master**, **Alone**).

4 **Wireless DMX Status** - Indicates the status of the wireless DMX connection. See About Wireless DMX Status for possible status indications.

5 - Indicates that Bluetooth® is activated.

6 **Error Message** - Indicates an error in one or more device component(s). Find details on current errors under **System Info** > **Error Info**.

9.4.5 MAIN SCREEN SLAVE MODE

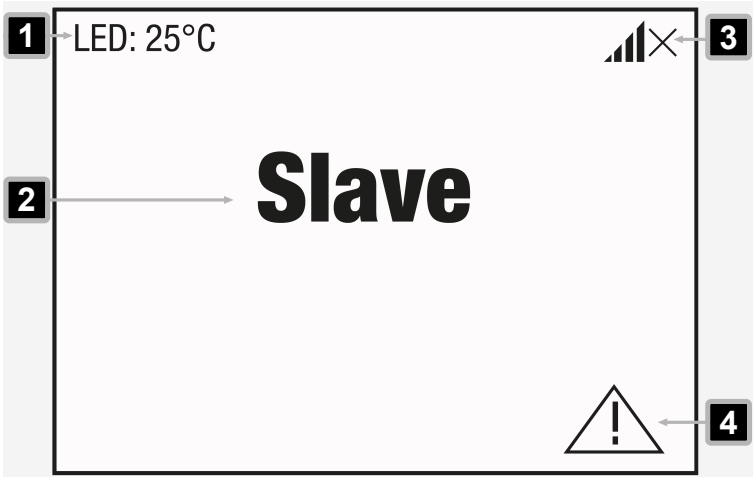

1 **LED Temperature** - Illuminant temperature in °C or °F.
Change the displayed temperature unit under **System Info** > **Temperature**.

2 **Slave** - Indicates the **Slave** operating mode.

3 **Wireless DMX Status** - Indicates the status of the wireless DMX connection. See About Wireless DMX Status for possible status indications.

4 **Error Message** - Indicates an error in one or more device component(s). Find details on current errors under **System Info** > **Error Info**.

9.5 SUBMENUS

9.5.1 ABOUT THE SUBMENUS

Find detailed explanations of all submenu layers in the submenu visual guide. Each section begins with a graphic showing its exact position within the menu structure, followed by tables listing the available submenu items.

- *Functional descriptions of the menu items are shown in italics* **1** .
  (This applies to the final selectable menu item in each layer.)
- Factory settings are highlighted in **bold** **2** .

Example:

Layer 3	Layer 4	Function Description
State	On	*Activates the wireless module* **1**
	Off **2**	*Deactivates the wireless module* **1**

9.5.2 CONTROL MENU

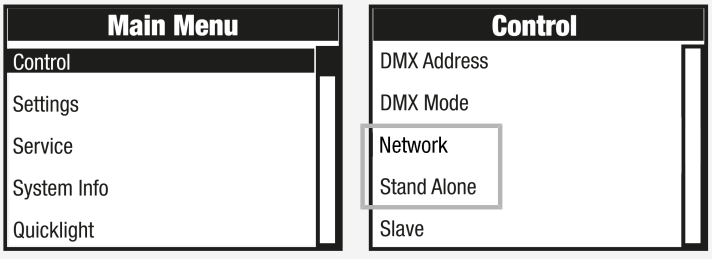

9.5.2.1 NETWORK ART-NET SUBMENU LAYERS

Layer 3	Layer 4	Layer 5 */ Function Description*	
Protocol	Artnet	*Control via* Art-Net	
	sACN	*Control via* sACN	
Universe	Absolute Univ.	*Sets the absolute* Art-Net *universe*	*Depends on net, subnet, and universe*
	Net	*Sets the* Art-Net *network*	*Depends on absolute universe*
	Subnet	*Sets the* Art-Net *subnet*	

Layer 3	Layer 4	Layer 5 / *Function Description*	
	Universe	*Sets the* Art-Net *universe*	
IP Address	xxx.xxx.xxx.xxx	*Sets the IP address*	
Subnet Mask	xxx.xxx.xxx.xxx	*Sets the subnet mask*	
Dual Input Modes	Pixel Address	*Sets the pixel start address from 001 to 4xx*	
	Signal Setup	Pixel via network	*Sets the pixel control via network*
		Pixel via DMX	*Sets the pixel control via* DMX
Signal Routing	Send to XLR	*Relays the control signal to* XLR Out	
	Backup by XLR	*Controls via* XLR *with network signal interruption*	
	Receive only	*No connection between the network signal and* XLR *connectors*	

9.5.2.2 NETWORK SACN SUBMENU LAYERS

Layer 3	Layer 4	Layer 5 / *Function Description*	
Protocol	Artnet	*Control via* Art-Net	
	sACN	*Control via* sACN	
Universe	Absolute Univ.	*Sets the* sACN *universe*	
IP Address	xxx.xxx.xxx.xxx	*Sets the IP address*	
Subnet Mask	xxx.xxx.xxx.xxx	*Sets the subnet mask*	
Dual Input Modes	Pixel Address	*Sets the pixel start address from 001 to 4xx*	
	Signal Setup	Pixel via network	*Sets the pixel control via network*
		Pixel via DMX	*Sets the pixel control via* DMX
Signal Routing	Send to XLR	*Relays the control signal to* XLR Out	
	Backup by XLR	*Controls via* XLR *with network signal interruption*	
	Receive only	*No connection between the network signal and* XLR *connectors*	

9.5.2.3 STAND-ALONE SUBMENU LAYERS

Layer 3	Layer 4	Layer 5 / Layer 6 / *Function Description*	
Master/Alone	Master	*Relays the control signal via* DMX OUT	
	Alone	*Does not relay the control signal*	
Play Scene/Loop	Scene	Scene 1 … 8	*Selects and activates the desired scene*
	Loop	Loop 1 … 8	*Selects and activates the desired loop*
Edit Scene	Scene 1 … 8	Tilt	*Sets each scene individually. Scenes are activated by selecting them.*
		Dimmer	
		...	

Layer 3	Layer 4	Layer 5 / Layer 6 / *Function Description*		
Edit Loop	Loop 1 … 8	Step	1 … 8	*Selects step 1 … 8*
		t-Step	0s … 20min	*Sets the step time*
		t-Fade	0s … 20min	*Sets the fade time*
		User Scene	1 … 8	*Selects scene 1 … 8*
		Skip Step	No / Yes	*Skip step: No/Yes*

9.5.3 SETTINGS MENU

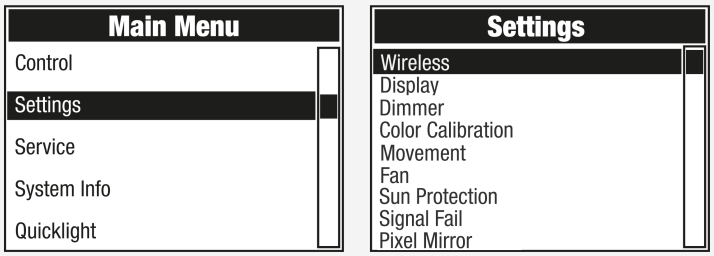

9.5.3.1 WIRELESS SUBMENU LAYERS

Layer 3	Layer 4	Layer 5 / *Function Description*	
State	On	*Activates the wireless module*	
	Off	*Deactivates the wireless module*	
Operating Mode	**Receive**	*Wireless module = receiver*	
	Transmit CRMX	*Wireless module = transmitter with* CRMX *transmitter standard*	
	Transmit G4s	*Wireless module = transmitter with* G4s *transmitter standard*	
	Transmit G3	*Wireless module = transmitter with* G3 *transmitter standard*	
Linking	Mode Receive: Receive Reset	*Resets the receiver and puts it in pairing standby mode*	
	Mode Transmit: Link	*Pairs with compatible, ready-to-pair wireless devices*	
	Mode Transmit: Unlink	*Disconnects wireless* DMX *connections and places in pairing standby mode*	
Linking Key	Linking Key	*Sets the connection key*	
	CRMX Mode (only avail- able with operating mode = Re- ceive)	**CRMX**	*Receiver standard* = CRMX
		CRMX2	*Receiver standard* = CRMX2
	CRMX Universe	**A** … H	*Selects* CRMX *universe A to H*

Layer 3	Layer 4		Layer 5 / *Function Description*	
Universe Metadata	RGB Color Code		Red Orange Yellow Green Cyan Blue Purple White	RGB *code for colour display of the universe*
	Universe Name		*A 16-character string with a customisable name that identifies the universe*	
Bluetooth	State	**On**	*Activates* Bluetooth®	
		Off	*Deactivates* Bluetooth®	
	Pin	**On**	*Activates the* PIN *request (***factory setting 081569***)*	
		Off	*Deactivates the* PIN *request*	
Signal Routing	**Send to XLR**		*Sends incoming signal to* XLR *connector*	
	Backup by XLR		*Uses incoming signal from* XLR *connector if wireless signal is lost*	
	Receive only		*No connection between wireless signal and* XLR *connectors*	

9.5.3.2 DISPLAY SUBMENU LAYERS

Layer 3	Layer 4	*Function Description*
Reverse	On	*180° display rotation (for example, for overhead installation)*
	Off (if Auto is not available)	*No display rotation*
	Auto	*Automatic position detection (upright/ overhead mounting)*
Off Timer	Always On	*Permanently on*
	Off after 20s	*Deactivates after approximately 20 seconds of inactivity*
Autolock	On after 60s	*Controls locked after approximately 60 seconds without input (*LOCKED*). Unlock: Press* UP *and* DOWN *simultaneously for approximately 5 seconds.*
	Off	*Deactivates* Autolock

9.5.3.3 DIMMER SUBMENU LAYERS

Layer 3	Layer 4	*Function Description*
Curve (Dimmer Curve)	**Linear**	*Light intensity increases linearly with* DMX *value*
	Exponential	*Adjusts the light intensity finely at lower* DMX *values and broadly at higher* DMX *values*
	Logarithmic	*Adjusts the light intensity broadly at lower* DMX *values and finely at higher* DMX *values*
	S-Curve	*Adjusts the light intensity finely at lower and higher* DMX *values and broadly at medium* DMX *values*
PMW Frequency	650Hz **1530Hz** 3600Hz 12kHz 18.9kHz 25kHz	*Selects the* LED PWM *frequency*
Response	**LED**	*The device responds immediately to changes of the* DMX *value*
	Halogen	*The light behaves in a similar way to a halogen light with gradual changes of brightness*
Redshift	Dim to Warm	*Simulates the colour drift when dimming a halogen light. When dimming the light, the colour temperature changes automatically to increasingly warm white tones and amber (and vice versa).*
	Off	*Disables the function*

9.5.3.4 COLOUR CALIBRATION SUBMENU LAYERS

Layer 3	Layer 4	*Function Description*
User	Red	*Custom colour calibration. Sets red, green, blue, and lime brightness with values ranging from 0 to 255*
	Green	
	Blue	
	...	
Smart	*Factory setting*	

9.5.3.5 MOVEMENT SUBMENU LAYERS

Layer 3	Layer 4	*Function Description*
Tilt Reverse	On	*Reverses the tilt direction*
	Off	*Keeps the tilt direction*
Position Feedback	**On**	*Enables automatic position correction*
	Off	*Disables automatic position correction*

Layer 3	Layer 4	*Function Description*
Move in Black	On	*Blackout during head movement*
	Off	*No blackout during head movement*
Silent Movement	On	*Slowed motor movements for quieter operation*
	Off	*Disables the function*

9.5.3.6 FAN SUBMENU LAYERS

Layer 3	*Function Description*
Auto	*Automatic fan control (controls fans by dimmer value and the device temperature)*
Silent	*Deactivates the fans*
Constant Low	*Constant low fan speed with reduced brightness, if necessary*
Constant Mid	*Constant average fan speed with reduced brightness, if necessary*
Constant High	*Constant high fan speed*

9.5.3.7 SUN PROTECTION SUBMENU LAYERS

Layer 3	*Function Description*
On	*Activates blackout and directs the moving heads downward*
Off	*Disables the function*

9.5.3.8 SIGNAL FAIL SUBMENU LAYERS

Layer 3	*Function Description*
Hold	*Retains the last command*
Last Stand Alone	*Activates the last selected stand-alone operating mode*
Fade to Black (10s)	*10-second fade to blackout*
Blackout	*Activates blackout*
Full	*Switches to full output if signal is lost*

9.5.3.9 PIXEL MIRROR SUBMENU LAYERS

Layer 3	*Function Description*
Off	*Disables the function*
On	*Mirror pixels*

9.5.4 SERVICE MENU

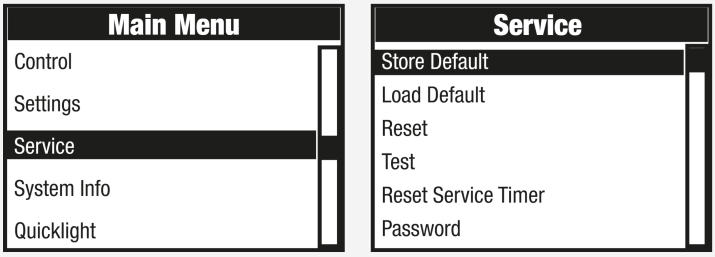

9.5.4.1 SERVICE FUNCTION SUBMENU LAYERS

Layer 2	Layer 3	Layer 4	Layer 5 / *Function Description*	
Store Default	User A		*Saves all current settings as user preset A*	
	User B		*Saves all current settings as user preset B*	
	User C		*Saves all current settings as user preset C*	
Load Default	Factory		*Resets to factory setting*	
	User A		*Resets to user A values*	
	User B		*Resets to user B values*	
	User C		*Resets to user C values*	
Reset	Head		*Resets motors in the device head*	
	All		*Resets all motors*	
Test	Test Sequence		*Pre-programmed sequence to test all components*	
	Stress Test		*Pre-programmed sequence to test all components under maximum load*	
	Motor Test		Tilt	*Activates all motors individually with values of 000 to 255*
			Zoom	
			...	
Reset Service Timer	No		*Does not reset the service operation time*	
	Yes	Reset Now	*Resets the service operating time*	
Password	*For service purposes only.*			

9.5.5 SYSTEM INFO MENU

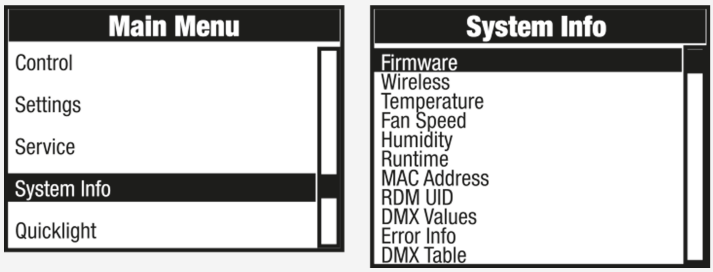

9.5.5.1 SYSTEM INFO SUBMENU LAYERS

Layer 2	Layer 3 / Layer 4 / *Function Description*			
Firmware	DISP	vx.x.x	*Displays the firmware version of the corresponding component*	
	NET	vx.x.x		
	DRV	vx.x.x		
	...			
Wireless	Module		*Displays the wireless module model*	
	Device Name		OTOSLC12-xxxx	*Displays the device name*
	Version		Hardware	*Hardware version number*
			Software	*Software version number*
	Link Quality		%	*Connection quality in per cent*
	Data Source		None	*Information on the data source*
			DMX	
			Wireless Link	
			SPI	
			BLE	
	Status		Operational	*Status information*
			DMX Data	
			RDM Identify	
			RF Link	
			Link State	
Temperature	LED		xxx° C / ° F	*Displays the temperature of the corresponding component*
	Base		xxx° C / ° F	
	...			
	Temperature Unit		° C	*Sets the temperature unit*
			° F	
Fan Speed	Fan X		*Displays the speed of the corresponding fans*	
	Fan Y			
	...			
Humidity	Head		x %	*Displays the relative humidity in per cent*
	Base		X %	
Runtime	Total		xxxx h : xx m	*Total operating time*
	Operation		xxxx h : xx m	*Time in use*
	LED	Total	xxxx h : xx m	*Lamp operating time*
	Service		xxxx h : xx m	*Operating time after resetting the service operating time*
MAC Address	xx:xx:xx:xx:xx:xx		*MAC address*	

Layer 2	**Layer 3 / Layer 4 /** ***Function Description***
RDM UID	RDM Unique Identifier
DMX Values	*Displays the* DMX *values present*
Error Info	*Displays an error in case of malfunction*
DMX Table	*Displays* DMX *mode tables*

10 MAINTENANCE

10.1 PRODUCT MAINTENANCE



CAUTION

Mains Voltage

Risk of electric shock

a. Before you perform maintenance work on the device, disconnect the device from all poles.



NOTICE

Damage to the device and void of warranty

a. Do not use cleaning agents, disinfectants, alcohol, or agents with abrasive effect for cleaning.

Carry out the maintenance measures listed below on a regular basis. The frequency of cleaning depends on the environment in which you use the product. Damp or dirty environments may cause increased soiling and wear.

VISUAL INSPECTION

Check the following points before operating the device.

- ⚠ **WARNING! Risk of electric shock.** Check mains power cables for damage or material fatigue.
- Check all air inlets and outlets for damage, dust, or dirt deposits.
- Check all outside screws and covers for corrosion, damage or excessive wear.
- Check all connectors and rubber sealing caps for damage, dust, or dirt deposits.
- ⚠ **WARNING! Risk of falling objects.** Check that all screws, fasteners, and rigging points are securely tightened.

CLEANING

- Clean the surface with a clean and damp lint-free cotton cloth. Wipe off all excess moisture.
- **NOTICE! Do not use compressed air.** Clean any air inlets and outlets of dust and dirt deposits with a clean and damp lint-free cotton cloth.
- Clean all plug contacts from dust and dirt with a dry lint-free cotton cloth.
- Clean the front glass of your Cameo Lighting device on a monthly basis with a clean and damp lint-free cotton cloth dampened with a 1:1 solution of water and mild detergent. Do not use alcohol, solvents or abrasives.

REPLACING GOBOS

⚠ **CAUTION! Gobos may only be replaced by skilled service personnel.**

10.2 FIRMWARE UPDATE



Update your device firmware using a dedicated update setup.

The update process requires:

- CLUPDATER3
- USB flash drive (FAT32-formatted)
- 5-pin DMX cable
- Update software, downloadable from: *https://portal.adamhall.com/downloadcenter*

Contact the Adam Hall customer service to order the updater device.
You will find detailed instructions for performing the software update included with the device.

10.3 STORING THE DEVICE

Store the device only in a dry and clean environment. If you are storing the individual components of the device, use special protective covers, bags, and cases. Find such accessories for your product in the Adam Hall Shop (https://www.adamhall.com/shop).

11 REPAIR



Do not repair the device.

a. Repairs may only be carried out by specialist personnel authorised by the manufacturer.
b. If your device is damaged or requires service, contact the Adam Hall Customer Service.

12 DISPOSAL

12.1 PACKAGING DISPOSAL



1. You can feed the packaging into the reusable material cycle using the usual disposal methods.
2. Separate the packaging in accordance with the applicable disposal laws and recycling regulations in your country

12.2 DEVICE DISPOSAL



1. This device is subject to the European Directive on Waste Electrical and Electronic Equipment, as amended. WEEE Directive Waste Electrical and Electronic Equipment. Old appliances do not belong in the household waste. The old device must be disposed of via an approved disposal company or a municipal disposal facility. Observe the applicable regulations in your country.
2. Observe all disposal laws applicable in your country.
3. As a private customer, you can obtain information on environmentally friendly disposal options from the seller of the product or the appropriate regional authorities.
4. Retailers are often legally obliged to take back items free of charge.
5. Old appliances that contain harmful substances are labelled with the symbol of a crossed-out dustbin.
6. Current information on the collection rate can be found at the following website: *https://environment.ec.europa.eu/*. Search for the following term: waste-electrical-and-electronic-equipment-weee.

OTOS® LC12

LED Wash-Moving Head

DMX CONTROL TABLE



NOTICE

EN: After the adjustments have been made, set the value to 000 to avoid disturbance by endless function call.

DE: Nachdem die Einstellungen vorgenommen wurden, stellen Sie den Wert auf 000 ein, um Störungen durch endlosen Funktionsaufruf zu vermeiden.

FR: Une fois les ajustements effectués, réglez la valeur sur 000 pour éviter les perturbations par appel de fonction sans fin.

ES: Después de realizar los ajustes, establezca el valor en 000 para evitar perturbaciones mediante una llamada de función sin fin.

PL: Po dokonaniu ustawień ustaw wartość na 000, aby uniknąć zakłóceń przez niekończące się wywołanie funkcji.

IT: Dopo aver effettuato le regolazioni, impostare il valore su 000 per evitare disturbi causati da una chiamata a funzione infinita.

25CH Effect	24CH Wash	48CH Pattern			
Channel	**Channel**	**Channel**	**Function**	**Values**	
1	1	1	Tilt All	000 - 255	0 % ... 100 %
2	2	2	Tilt fine All	000 - 255	
3		3	Tilt Pattern	000 - 005	Off
				006 - 026	1
				027 - 047	2
				048 - 068	3
				069 - 089	4
				090 - 110	5
				111 - 131	6
				132 - 152	7
				153 - 173	8
				174 - 194	9
				195 - 215	10
				216 - 236	11
				237 - 255	12
4		4	Tilt Pattern Size	000 - 255	Small to big
5		5	Tilt Pattern Speed	000 - 000	Off
				001 - 127	Pattern speed fast to slow
				128 - 128	Pattern speed stop
				129 - 255	Pattern speed slow to fast (backwards)
6	3	6	Dimmer	000 - 255	0 % ... 100 %
7	4	7	Dimmer fine	000 - 255	
				000 - 005	Open

OTOS® LC12

LED Wash-Moving Head

DMX CONTROL TABLE

8	5	8	Strobe	006	-	010	Closed
				011	-	022	Ramp up/down slow to fast
				023	-	033	Ramp up/down random slow to fast
				034	-	045	Ramp up slow to fast
				046	-	056	Ramp up random slow to fast
				057	-	068	Ramp down slow to fast
				069	-	079	Ramp down random slow to fast
				080	-	102	Random strobe effect slow to fast
				103	-	127	Strobe break effect 5 s ... 1 s (short burst with break)
				128	-	250	Strobe slow to fast (< 1 Hz to 20 Hz)
				251	-	255	Open
9	6	9	Red	000	-	255	0 % ... 100 %
	7	10	Red fine	000	-	255	
10	8	11	Green	000	-	255	0 % ... 100 %
	9	12	Green fine	000	-	255	
11	10	13	Blue	000	-	255	0 % ... 100 %
	11	14	Blue fine	000	-	255	
12	12	15	Lime	000	-	255	0 % ... 100 %
	13	16	Lime fine	000	-	255	
	14	17	Color Temperature (affects Color Mixing)	000	-	005	Off
				006	-	006	Warm White
				007	-	046	Warm White to 2700 K
				047	-	047	Bulb White (2700 K)
				048	-	087	2700 K to 3200 K
				088	-	088	Halogen White (3200 K)
				089	-	128	3200 K to 4000 K
				129	-	129	Neutral White (4000 K)
				130	-	169	4000 K to 5600 K
				170	-	170	Studio White (5600 K)
				171	-	210	5600 K to 6500 K
				211	-	211	Daylight White (6500 K)
				212	-	251	6500 K to Cold White
				252	-	255	Cold White
	15	18	Tint (affects Color Temperature)	000	-	000	Off
				001	-	127	Magenta -> neutral
				128	-	128	Neutral
				129	-	255	Neutral -> green
				000	-	005	No function
				006	-	009	46 Dark Magenta
				010	-	013	29 Plasa Red
				014	-	017	26 Bright Red
				018	-	021	127 Smokey Pink
				022	-	025	36 Medium Pink
				026	-	029	19 Fire

OTOS® LC12

LED Wash-Moving Head

DMX CONTROL TABLE

				030	-	033	135 Deep Golden Amber
				034	-	037	778 Millennium Gold
				038	-	041	21 Gold Amber
				042	-	045	157 Pink
				046	-	049	110 Middle Rose
				050	-	053	109 Light Salmon
				054	-	057	35 Light Pink
				058	-	061	134 Golden Amber
				062	-	065	17 Surprise Peach
				066	-	069	746 Brown
				070	-	073	105 Orange
				074	-	077	20 Medium Amber
				078	-	081	768 Egg Yolk Yellow
				082	-	085	15 Deep Straw
				086	-	089	767 Nectarine
				090	-	093	101 Yellow
				094	-	097	100 Spring Yellow
			Color Presets	098	-	101	88 Lime Green
	16	**19**	(override Color Mixing &	102	-	105	121 LEE Green
			Color Temperature)	106	-	109	738 Jas Green
				110	-	113	89 Moss Green
				114	-	117	139 Primary Green
				118	-	121	124 Dark Green
				122	-	125	323 Jade
				126	-	129	354 Special Steel Blue
				130	-	133	116 Medium Blue-Green
				134	-	137	183 Moonlight Blue
				138	-	141	132 Medium Blue
				142	-	145	119 Dark Blue
				146	-	149	716 Mikkel Blue
				150	-	153	71 Tokyo Blue
				154	-	157	181 Congo Blue
				158	-	161	799 Special KH Lavender
				162	-	165	707 Ultimate Violet
				166	-	169	343 Special Medium Lavender
				170	-	173	798 Chrysalis Pink
				174	-	177	701 Provence
				178	-	181	797 Deep Purple
				182	-	185	48 Rose Purple
				186	-	189	345 Fuchsia Pink
				190	-	193	795 Magical Magenta
				194	-	197	128 Bright Pink
				198	-	201	2 Rose Pink
				202	-	255	No function
				000	-	005	0 s (Off)

OTOS® LC12

LED Wash-Moving Head

DMX CONTROL TABLE

	17	20	Color Crossfade (affects HSI, CCT and Color Presets)	006	-	105	0.1 s ... 10 s (0.1 s steps)
				106	-	214	11 s ... 119 s (1 s steps)
				215	-	244	2 m ... 4 m 50 s (10 s steps)
				245	-	255	5 m ... 15 m (1 m steps)
13	18	21	Line Dimmer	000	-	255	0 % ... 100 %
14	19	22	Line Strobe	000	-	005	Open
				006	-	010	Closed
				011	-	022	Ramp up/down slow to fast
				023	-	033	Ramp up/down random slow to fast
				034	-	045	Ramp up slow to fast
				046	-	056	Ramp up random slow to fast
				057	-	068	Ramp down slow to fast
				069	-	079	Ramp down random slow to fast
				080	-	102	Random strobe effect slow to fast
				103	-	127	Strobe break effect 5 s to 1 s (short burst with break)
				128	-	250	Strobe slow to fast (< 1 Hz to 20 Hz)
				251	-	255	Open
15	20	23	Line Red	000	-	255	0 % ... 100 %
16	21	24	Line Green	000	-	255	0 % ... 100 %
17	22	25	Line Blue	000	-	255	0 % ... 100 %
18		26	Line Pattern Selection	000	-	005	Off
				006	-	026	1
				027	-	047	2
				048	-	068	3
				069	-	089	4
				090	-	110	5
				111	-	131	6
				132	-	152	7
				153	-	173	8
				174	-	194	9
				195	-	215	10
				216	-	236	11
				237	-	255	12
19		27	Line Pattern Speed	000	-	000	Off
				001	-	063	Line pattern speed slow to fast (chase)
				064	-	064	Line pattern stop
				065	-	127	Line pattern speed fast to slow (chase) (backwards)
				128	-	191	Line pattern speed slow to fast (fade)
				192	-	192	Line pattern stop
				193	-	255	Line pattern speed fast to slow (fade) (backwards)
				000	-	005	Off
				006	-	026	1

OTOS® LC12

LED Wash-Moving Head

DMX CONTROL TABLE

20		28	Pattern Selection	027	-	047	2
				048	-	068	3
				069	-	089	4
				090	-	110	5
				111	-	131	6
				132	-	152	7
				153	-	173	8
				174	-	194	9
				195	-	215	10
				216	-	236	11
				237	-	255	12
21		29	Pattern Speed	000	-	000	Off
				001	-	063	Pattern speed slow to fast (chase)
				064	-	064	Pattern stop
				065	-	127	Pattern speed fast to slow (chase) (backwards)
				128	-	191	Pattern speed slow to fast (fade)
				192	-	192	Pattern stop
				193	-	255	Pattern speed fast to slow (fade) (backwards)
		30	Background Dimmer	000	-	255	0 % ... 100 %
		31	Background Dimmer fine	000	-	255	
		32	Background Strobe	000	-	005	Open
				006	-	010	Closed
				011	-	022	Ramp up/down slow to fast
				023	-	033	Ramp up/down random slow to fast
				034	-	045	Ramp up slow to fast
				046	-	056	Ramp up random slow to fast
				057	-	068	Ramp down slow to fast
				069	-	079	Ramp down random slow to fast
				080	-	102	Random strobe effect slow to fast
				103	-	127	Strobe break effect 5 s to 1 s (short burst with break)
				128	-	250	Strobe slow to fast (< 1 Hz to 20 Hz)
				251	-	255	Open
		33	Background Red	000	-	255	0 % ... 100 %
		34	Background Red fine	000	-	255	
		35	Background Green	000	-	255	0 % ... 100 %
		36	Background Green fine	000	-	255	
		37	Background Blue	000	-	255	0 % ... 100 %
		38	Background Blue fine	000	-	255	
		39	Background Lime	000	-	255	0 % ... 100 %
		40	Background Lime fine	000	-	255	
				000	-	005	Off

OTOS® LC12

LED Wash-Moving Head

DMX CONTROL TABLE

		41	Background Color Temperature (affects Background Color Mixing)	006	-	006	Warm White
				007	-	046	Warm White to 2700 K
				047	-	047	Bulb White (2700 K)
				048	-	087	2700 K to 3200 K
				088	-	088	Halogen White (3200 K)
				089	-	128	3200 K to 4000 K
				129	-	129	Neutral White (4000 K)
				130	-	169	4000 K to 5600 K
				170	-	170	Studio White (5600 K)
				171	-	210	5600 K to 6500 K
				211	-	211	Daylight White (6500 K)
				212	-	251	6500 K to Cold White
				252	-	255	Cold White
		42	Background Tint (affects Background Color Temperature)	000	-	000	Off
				001	-	127	Magenta -> neutral
				128	-	128	Neutral
				129	-	255	Neutral -> green
		43	Background Color Presets (override Background Color Mixing & Color Temperature)	000	-	005	No function
				006	-	009	46 Dark Magenta
				010	-	013	29 Plasa Red
				014	-	017	26 Bright Red
				018	-	021	127 Smokey Pink
				022	-	025	36 Medium Pink
				026	-	029	19 Fire
				030	-	033	135 Deep Golden Amber
				034	-	037	778 Millennium Gold
				038	-	041	21 Gold Amber
				042	-	045	157 Pink
				046	-	049	110 Middle Rose
				050	-	053	109 Light Salmon
				054	-	057	35 Light Pink
				058	-	061	134 Golden Amber
				062	-	065	17 Surprise Peach
				066	-	069	746 Brown
				070	-	073	105 Orange
				074	-	077	20 Medium Amber
				078	-	081	768 Egg Yolk Yellow
				082	-	085	15 Deep Straw
				086	-	089	767 Nectarine
				090	-	093	101 Yellow
				094	-	097	100 Spring Yellow
				098	-	101	88 Lime Green
				102	-	105	121 LEE Green
				106	-	109	738 Jas Green
				110	-	113	89 Moss Green

OTOS® LC12

LED Wash-Moving Head

DMX CONTROL TABLE

				114	- 117	139 Primary Green
				118	- 121	124 Dark Green
				122	- 125	323 Jade
				126	- 129	354 Special Steel Blue
				130	- 133	116 Medium Blue-Green
				134	- 137	183 Moonlight Blue
				138	- 141	132 Medium Blue
				142	- 145	119 Dark Blue
				146	- 149	716 Mikkel Blue
				150	- 153	71 Tokyo Blue
				154	- 157	181 Congo Blue
				158	- 161	799 Special KH Lavender
				162	- 165	707 Ultimate Violet
				166	- 169	343 Special Medium Lavender
				170	- 173	798 Chrysalis Pink
				174	- 177	701 Provence
				178	- 181	797 Deep Purple
				182	- 185	48 Rose Purple
				186	- 189	345 Fuchsia Pink
				190	- 193	795 Magical Magenta
				194	- 197	128 Bright Pink
				198	- 201	2 Rose Pink
				202	- 255	No function
		44	Background Color Crossfade (affects Background HSI, CCT and Color Presets)	000	- 005	0 s (Off)
				006	- 105	0,1s ... 10 s (0,1 s steps)
				106	- 214	11 s ... 119s (1s steps)
				215	- 244	2 m ... 4 m 50 s (10 s steps)
				245	- 255	5 m ... 15 m (1 m steps)
22	23	45	Zoom	000	- 255	Narrow to wide
23		46	Zoom Pattern	000	- 005	Off
				006	- 026	1
				027	- 047	2
				048	- 068	3
				069	- 089	4
				090	- 110	5
				111	- 131	6
				132	- 152	7
				153	- 173	8
				174	- 194	9
				195	- 215	10
				216	- 236	11
				237	- 255	12
24		47	Zoom Pattern Speed	000	- 000	Off
				001	- 127	Pattern speed fast to slow
				128	- 128	Pattern speed stop

OTOS® LC12

LED Wash-Moving Head

DMX CONTROL TABLE

				129	-	255	Pattern speed slow to fast (backwards)
25	24	48	Device settings (hold value for 3 seconds)	000	-	005	No function
				006	-	007	Blackout while tilt moving on
				008	-	009	Blackout while tilt moving off
				010	-	013	No function
				014	-	015	Sun Protection On
				016	-	017	Sun Protection Off
				018	-	019	Sleep mode on
				020	-	021	Sleep mode off/wake up
				022	-	024	No function
				025	-	025	Record user scene 1
				026	-	026	Record user scene 2
				027	-	027	Record user scene 3
				028	-	028	Record user scene 4
				029	-	029	Record user scene 5
				030	-	030	Record user scene 6
				031	-	031	Record user scene 7
				032	-	032	Record user scene 8
				033	-	045	No function
				046	-	047	Invert tilt on
				048	-	049	Invert tilt off
				050	-	057	No function
				058	-	059	Pixel mirroring off
				060	-	065	Pixel mirroring on
				066	-	073	No function
				074	-	075	Dimmer response LED
				076	-	077	Dimmer response halogen
				078	-	081	No function
				082	-	083	DTW (redshift) on
				084	-	085	DTW (redshift) off
				086	-	093	No function
				094	-	095	Silent movement on
				096	-	097	Silent movement off
				098	-	099	Fan auto
				100	-	101	Fan off
				102	-	103	Fan constant low
				104	-	105	Fan constant medium
				106	-	107	Fan constant high
				108	-	119	No function
				120	-	121	PWM 1 (650 Hz)
				122	-	123	PWM 2 (1530 Hz)
				124	-	125	PWM 3 (3600 Hz)
				126	-	127	PWM 4 (12000 Hz)
				128	-	129	PWM 5 (18900 Hz)
				130	-	131	PWM 6 (25000 Hz)

OTOS® LC12

LED Wash-Moving Head

DMX CONTROL TABLE

				132	- 135	No function
				136	- 137	User calibration
				138	- 139	Smart calibration
				140	- 141	Display always on
				142	- 143	Display off after 20 s
				144	- 163	No function
				164	- 165	Dimmer curve linear
				166	- 167	Dimmer curve exponential
				168	- 169	Dimmer curve logarithmic
				170	- 171	Dimmer curve S-curve
				172	- 221	No function
				222	- 223	No function
				224	- 233	No function
				234	- 235	Reset head
				236	- 237	Reset all
				238	- 239	No function
				240	- 241	Load factory defaults
				242	- 243	No function
				244	- 245	Load user default A
				246	- 247	Load user default B
				248	- 249	Load user default C
				250	- 255	No function

126CH Pixel	175CH Pixel Full	42CH Dual Input				
Channel	**Channel**	**Channel**	**Function**	**Values**		
1	1	1	Tilt 1	000	- 255	0 % ... 100 %
2	2	2	Tilt fine 1	000	- 255	
3	3	3	Tilt 2	000	- 255	0 % ... 100 %
4	4	4	Tilt fine 2	000	- 255	
5	5	5	Tilt 3	000	- 255	0 % ... 100 %
6	6	6	Tilt fine 3	000	- 255	
7	7	7	Tilt 4	000	- 255	0 % ... 100 %
8	8	8	Tilt fine 4	000	- 255	
9	9	9	Tilt 5	000	- 255	0 % ... 100 %
10	10	10	Tilt fine 5	000	- 255	
11	11	11	Tilt 6	000	- 255	0 % ... 100 %
12	12	12	Tilt fine 6	000	- 255	
13	13	13	Tilt 7	000	- 255	0 % ... 100 %
14	14	14	Tilt fine 7	000	- 255	
15	15	15	Tilt 8	000	- 255	0 % ... 100 %
16	16	16	Tilt fine 8	000	- 255	
17	17	17	Tilt 9	000	- 255	0 % ... 100 %

OTOS® LC12

LED Wash-Moving Head

DMX CONTROL TABLE

18	18	18	Tilt fine 9	000 - 255	0 % ... 100 %
19	19	19	Tilt 10	000 - 255	0 % ... 100 %
20	20	20	Tilt fine 10	000 - 255	0 % ... 100 %
21	21	21	Tilt 11	000 - 255	0 % ... 100 %
22	22	22	Tilt fine 11	000 - 255	
23	23	23	Tilt 12	000 - 255	0 % ... 100 %
24	24	24	Tilt fine 12	000 - 255	
25	25	25	Dimmer	000 - 255	0 % ... 100 %
26	26	26	Dimmer fine	000 - 255	
27	27	27	Strobe	000 - 005	Open
				006 - 010	Closed
				011 - 022	Ramp up/down slow to fast
				023 - 033	Ramp up/down random slow to fast
				034 - 045	Ramp up slow to fast
				046 - 056	Ramp up random slow to fast
				057 - 068	Ramp down slow to fast
				069 - 079	Ramp down random slow to fast
				080 - 102	Random strobe effect slow to fast
				103 - 127	Strobe break effect 5 s to 1 s (short burst with break)
				128 - 250	Strobe slow to fast (< 1 Hz to 20 Hz)
				251 - 255	Open
	28		Red	000 - 255	0 % ... 100 %
	29		Red fine	000 - 255	
	30		Green	000 - 255	0 % ... 100 %
	31		Green fine	000 - 255	
	32		Blue	000 - 255	0 % ... 100 %
	33		Blue fine	000 - 255	
	34		Lime	000 - 255	0 % ... 100 %
	35		Lime fine	000 - 255	
	36		Color Temperature (affects Color Mixing)	000 - 005	Off
				006 - 006	Warm White
				007 - 046	Warm White to 2700 K
				047 - 047	Bulb White (2700 K)
				048 - 087	2700 K to 3200 K
				088 - 088	Halogen White (3200 K)
				089 - 128	3200 K to 4000 K
				129 - 129	Neutral White (4000 K)
				130 - 169	4000 K to 5600 K
				170 - 170	Studio White (5600 K)
				171 - 210	5600 K to 6500 K
				211 - 211	Daylight White (6500 K)
				212 - 251	6500 K to Cold White
				252 - 255	Cold White
			Tint	000 - 000	Off

OTOS® LC12

LED Wash-Moving Head

DMX CONTROL TABLE

	37		Tilt (affects Color Temperature)	001	-	127	Magenta -> neutral
				128	-	128	Neutral
				129	-	255	Neutral -> green
28	38	28	Line Dimmer	000	-	255	0 % ... 100 %
29	39	29	Line Strobe	000	-	005	Open
				006	-	010	Closed
				011	-	022	Ramp up/down slow to fast
				023	-	033	Ramp up/down random slow to fast
				034	-	045	Ramp up slow to fast
				046	-	056	Ramp up random slow to fast
				057	-	068	Ramp down slow to fast
				069	-	079	Ramp down random slow to fast
				080	-	102	Random strobe effect slow to fast
				103	-	127	Strobe break effect 5 s to 1 s (short burst with break)
				128	-	250	Strobe slow to fast (<1 Hz to 20 Hz)
				251	-	255	Open
	40		Line Red	000	-	255	0 % ... 100 %
	41		Line Green	000	-	255	0 % ... 100 %
	42		Line Blue	000	-	255	0 % ... 100 %
30	43	30	Zoom 1	000	-	255	Narrow to wide
31	44	31	Zoom 2	000	-	255	Narrow to wide
32	45	32	Zoom 3	000	-	255	Narrow to wide
33	46	33	Zoom 4	000	-	255	Narrow to wide
34	47	34	Zoom 5	000	-	255	Narrow to wide
35	48	35	Zoom 6	000	-	255	Narrow to wide
36	49	36	Zoom 7	000	-	255	Narrow to wide
37	50	37	Zoom 8	000	-	255	Narrow to wide
38	51	38	Zoom 9	000	-	255	Narrow to wide
39	52	39	Zoom 10	000	-	255	Narrow to wide
40	53	40	Zoom 11	000	-	255	Narrow to wide
41	54	41	Zoom 12	000	-	255	Narrow to wide
				000	-	005	No function
				006	-	007	Blackout while tilt moving on
				008	-	009	Blackout while tilt moving off
				010	-	013	No function
				014	-	015	Sun Protection On
				016	-	017	Sun Protection Off
				018	-	019	Sleep mode on
				020	-	021	Sleep mode off/wake up
				022	-	024	No function
				025	-	025	Record user scene 1
				026	-	026	Record user scene 2
				027	-	027	Record user scene 3
				028	-	028	Record user scene 4

OTOS® LC12

LED Wash-Moving Head

DMX CONTROL TABLE

				029	-	029	Record user scene 5
				030	-	030	Record user scene 6
				031	-	031	Record user scene 7
				032	-	032	Record user scene 8
				033	-	045	No function
				046	-	047	Invert tilt on
				048	-	049	Invert tilt off
				050	-	057	No function
				058	-	059	Pixel mirroring off
				060	-	065	Pixel mirroring on
				066	-	073	No function
				074	-	075	Dimmer response LED
				076	-	077	Dimmer response halogen
				078	-	081	No function
				082	-	083	DTW (redshift) on
				084	-	085	DTW (redshift) off
				086	-	093	No function
				094	-	095	Silent movement on
				096	-	097	Silent movement off
42	55	42	Device settings (hold value for 3 seconds)	098	-	099	Fan auto
				100	-	101	Fan off
				102	-	103	Fan constant low
				104	-	105	Fan constant medium
				106	-	107	Fan constant high
				108	-	119	No function
				120	-	121	PWM 1 (650 Hz)
				122	-	123	PWM 2 (1530 Hz)
				124	-	125	PWM 3 (3600 Hz)
				126	-	127	PWM 4 (12000 Hz)
				128	-	129	PWM 5 (18900 Hz)
				130	-	131	PWM 6 (25000 Hz)
				132	-	135	No function
				136	-	137	User calibration
				138	-	139	Smart calibration
				140	-	141	Display always on
				142	-	143	Display off after 20 s
				144	-	163	No function
				164	-	165	Dimmer curve linear
				166	-	167	Dimmer curve exponential
				168	-	169	Dimmer curve logarithmic
				170	-	171	Dimmer curve S-curve
				172	-	221	No function
				222	-	223	No function
				224	-	233	No function
				234	-	235	Reset heads

OTOS® LC12

LED Wash-Moving Head

DMX CONTROL TABLE

				236	-	237	Reset all
				238	-	239	No function
				240	-	241	Load factory defaults
				242	-	243	No function
				244	-	245	Load user default A
				246	-	247	Load user default B
				248	-	249	Load user default C
				250	-	255	No function
43	**56**	**43**	Red 1	000	-	255	0 % ... 100 %
44	**57**	**44**	Green 1	000	-	255	0 % ... 100 %
45	**58**	**45**	Blue 1	000	-	255	0 % ... 100 %
46	**59**	**46**	Lime 1	000	-	255	0 % ... 100 %
47	**60**	**47**	Red 2	000	-	255	0 % ... 100 %
48	**61**	**48**	Green 2	000	-	255	0 % ... 100 %
49	**62**	**49**	Blue 2	000	-	255	0 % ... 100 %
50	**63**	**50**	Lime 2	000	-	255	0 % ... 100 %
51	**64**	**51**	Red 3	000	-	255	0 % ... 100 %
52	**65**	**52**	Green 3	000	-	255	0 % ... 100 %
53	**66**	**53**	Blue 3	000	-	255	0 % ... 100 %
54	**67**	**54**	Lime 3	000	-	255	0 % ... 100 %
55	**68**	**55**	Red 4	000	-	255	0 % ... 100 %
56	**69**	**56**	Green 4	000	-	255	0 % ... 100 %
57	**70**	**57**	Blue 4	000	-	255	0 % ... 100 %
58	**71**	**58**	Lime 4	000	-	255	0 % ... 100 %
59	**72**	**59**	Red 5	000	-	255	0 % ... 100 %
60	**73**	**60**	Green 5	000	-	255	0 % ... 100 %
61	**74**	**61**	Blue 5	000	-	255	0 % ... 100 %
62	**75**	**62**	Lime 5	000	-	255	0 % ... 100 %
63	**76**	**63**	Red 6	000	-	255	0 % ... 100 %
64	**77**	**64**	Green 6	000	-	255	0 % ... 100 %
65	**78**	**65**	Blue 6	000	-	255	0 % ... 100 %
66	**79**	**66**	Lime 6	000	-	255	0 % ... 100 %
67	**80**	**67**	Red 7	000	-	255	0 % ... 100 %
68	**81**	**68**	Green 7	000	-	255	0 % ... 100 %
69	**82**	**69**	Blue 7	000	-	255	0 % ... 100 %
70	**83**	**70**	Lime 7	000	-	255	0 % ... 100 %
71	**84**	**71**	Red 8	000	-	255	0 % ... 100 %
72	**85**	**72**	Green 8	000	-	255	0 % ... 100 %
73	**86**	**73**	Blue 8	000	-	255	0 % ... 100 %
74	**87**	**74**	Lime 8	000	-	255	0 % ... 100 %
75	**88**	**75**	Red 9	000	-	255	0 % ... 100 %
76	**89**	**76**	Green 9	000	-	255	0 % ... 100 %
77	**90**	**77**	Blue 9	000	-	255	0 % ... 100 %
78	**91**	**78**	Lime 9	000	-	255	0 % ... 100 %
79	**92**	**79**	Red 10	000	-	255	0 % ... 100 %

OTOS® LC12

LED Wash-Moving Head

DMX CONTROL TABLE

80	93	80	Green 10	000 - 255	0 % ... 100 %
81	94	81	Blue 10	000 - 255	0 % ... 100 %
82	95	82	Lime 10	000 - 255	0 % ... 100 %
83	96	83	Red 11	000 - 255	0 % ... 100 %
84	97	84	Green 11	000 - 255	0 % ... 100 %
85	98	85	Blue 11	000 - 255	0 % ... 100 %
86	99	86	Lime 11	000 - 255	0 % ... 100 %
87	100	87	Red 12	000 - 255	0 % ... 100 %
88	101	88	Green 12	000 - 255	0 % ... 100 %
89	102	89	Blue 12	000 - 255	0 % ... 100 %
90	103	90	Lime 12	000 - 255	0 % ... 100 %
91	104	91	Line Top Red 1	000 - 255	0 % ... 100 %
92	105	92	Line Top Green 1	000 - 255	0 % ... 100 %
93	106	93	Line Top Blue 1	000 - 255	0 % ... 100 %
94	107	94	Line Top Red 2	000 - 255	0 % ... 100 %
95	108	95	Line Top Green 2	000 - 255	0 % ... 100 %
96	109	96	Line Top Blue 2	000 - 255	0 % ... 100 %
97	110	97	Line Top Red 3	000 - 255	0 % ... 100 %
98	111	98	Line Top Green 3	000 - 255	0 % ... 100 %
99	112	99	Line Top Blue 3	000 - 255	0 % ... 100 %
100	113	100	Line Top Red 4	000 - 255	0 % ... 100 %
101	114	101	Line Top Green 4	000 - 255	0 % ... 100 %
102	115	102	Line Top Blue 4	000 - 255	0 % ... 100 %
103	116	103	Line Top Red 5	000 - 255	0 % ... 100 %
104	117	104	Line Top Green 5	000 - 255	0 % ... 100 %
105	118	105	Line Top Blue 5	000 - 255	0 % ... 100 %
106	119	106	Line Top Red 6	000 - 255	0 % ... 100 %
107	120	107	Line Top Green 6	000 - 255	0 % ... 100 %
108	121	108	Line Top Blue 6	000 - 255	0 % ... 100 %
109	122	109	Line Top Red 7	000 - 255	0 % ... 100 %
110	123	110	Line Top Green 7	000 - 255	0 % ... 100 %
111	124	111	Line Top Blue 7	000 - 255	0 % ... 100 %
112	125	112	Line Top Red 8	000 - 255	0 % ... 100 %
113	126	113	Line Top Green 8	000 - 255	0 % ... 100 %
114	127	114	Line Top Blue 8	000 - 255	0 % ... 100 %
115	128	115	Line Top Red 9	000 - 255	0 % ... 100 %
116	129	116	Line Top Green 9	000 - 255	0 % ... 100 %
117	130	117	Line Top Blue 9	000 - 255	0 % ... 100 %
118	131	118	Line Top Red 10	000 - 255	0 % ... 100 %
119	132	119	Line Top Green 10	000 - 255	0 % ... 100 %
120	133	120	Line Top Blue 10	000 - 255	0 % ... 100 %
121	134	121	Line Top Red 11	000 - 255	0 % ... 100 %
122	135	122	Line Top Green 11	000 - 255	0 % ... 100 %
123	136	123	Line Top Blue 11	000 - 255	0 % ... 100 %
124	137	124	Line Top Red 12	000 - 255	0 % ... 100 %

OTOS® LC12

LED Wash-Moving Head

DMX CONTROL TABLE

125	138	125	Line Top Green 12	000 - 255	0 % ... 100 %
126	139	126	Line Top Blue 12	000 - 255	0 % ... 100 %
91	140	127	Line Bottom Red 1	000 - 255	0 % ... 100 %
92	141	128	Line Bottom Green 1	000 - 255	0 % ... 100 %
93	142	129	Line Bottom Blue 1	000 - 255	0 % ... 100 %
94	143	130	Line Bottom Red 2	000 - 255	0 % ... 100 %
95	144	131	Line Bottom Green 2	000 - 255	0 % ... 100 %
96	145	132	Line Bottom Blue 2	000 - 255	0 % ... 100 %
97	146	133	Line Bottom Red 3	000 - 255	0 % ... 100 %
98	147	134	Line Bottom Green 3	000 - 255	0 % ... 100 %
99	148	135	Line Bottom Blue 3	000 - 255	0 % ... 100 %
100	149	136	Line Bottom Red 4	000 - 255	0 % ... 100 %
101	150	137	Line Bottom Green 4	000 - 255	0 % ... 100 %
102	151	138	Line Bottom Blue 4	000 - 255	0 % ... 100 %
103	152	139	Line Bottom Red 5	000 - 255	0 % ... 100 %
104	153	140	Line Bottom Green 5	000 - 255	0 % ... 100 %
105	154	141	Line Bottom Blue 5	000 - 255	0 % ... 100 %
106	155	142	Line Bottom Red 6	000 - 255	0 % ... 100 %
107	156	143	Line Bottom Green 6	000 - 255	0 % ... 100 %
108	157	144	Line Bottom Blue 6	000 - 255	0 % ... 100 %
109	158	145	Line Bottom Red 7	000 - 255	0 % ... 100 %
110	159	146	Line Bottom Green 7	000 - 255	0 % ... 100 %
111	160	147	Line Bottom Blue 7	000 - 255	0 % ... 100 %
112	161	148	Line Bottom Red 8	000 - 255	0 % ... 100 %
113	162	149	Line Bottom Green 8	000 - 255	0 % ... 100 %
114	163	150	Line Bottom Blue 8	000 - 255	0 % ... 100 %
115	164	151	Line Bottom Red 9	000 - 255	0 % ... 100 %
116	165	152	Line Bottom Green 9	000 - 255	0 % ... 100 %
117	166	153	Line Bottom Blue 9	000 - 255	0 % ... 100 %
118	167	154	Line Bottom Red 10	000 - 255	0 % ... 100 %
119	168	155	Line Bottom Green 10	000 - 255	0 % ... 100 %
120	169	156	Line Bottom Blue 10	000 - 255	0 % ... 100 %
121	170	157	Line Bottom Red 11	000 - 255	0 % ... 100 %
122	171	158	Line Bottom Green 11	000 - 255	0 % ... 100 %
123	172	159	Line Bottom Blue 11	000 - 255	0 % ... 100 %
124	173	160	Line Bottom Red 12	000 - 255	0 % ... 100 %
125	174	161	Line Bottom Green 12	000 - 255	0 % ... 100 %
126	175	162	Line Bottom Blue 12	000 - 255	0 % ... 100 %

192CH Single Head	324CH Single Head Ext		
Channel	**Channel**	**Function**	**Values**

OTOS® LC12

LED Wash-Moving Head

DMX CONTROL TABLE

1	1	Tilt 1	000 - 255	0 % ... 100 %
2	2	Tilt fine 1	000 - 255	
3	3	Dimmer 1	000 - 255	0 % ... 100 %
4	4	Dimmer fine 1	000 - 255	
5	5	Strobe 1	000 - 005	Open
			006 - 010	Closed
			011 - 022	Ramp up/down slow to fast
			023 - 033	Ramp up/down random slow to fast
			034 - 045	Ramp up slow to fast
			046 - 056	Ramp up random slow to fast
			057 - 068	Ramp down slow to fast
			069 - 079	Ramp down random slow to fast
			080 - 102	Random strobe effect slow to fast
			103 - 127	Strobe break effect 5 s to 1 s (short burst with break)
			128 - 250	Strobe slow to fast (< 1 Hz to 20 Hz)
			251 - 255	Open
6	6	Red 1	000 - 255	0 % ... 100 %
	7	Red fine 1	000 - 255	
7	8	Green 1	000 - 255	0 % ... 100 %
	9	Green fine 1	000 - 255	
8	10	Blue 1	000 - 255	0 % ... 100 %
	11	Blue fine 1	000 - 255	
9	12	Lime 1	000 - 255	0 % ... 100 %
	13	Lime fine 1	000 - 255	
	14	Color Temperature (affects Color Mixing) 1	000 - 005	Off
			006 - 006	Warm White
			007 - 046	Warm White to 2700 K
			047 - 047	Bulb White (2700 K)
			048 - 087	2700 K to 3200 K
			088 - 088	Halogen White (3200 K)
			089 - 128	3200 K to 4000 K
			129 - 129	Neutral White (4000 K)
			130 - 169	4000 K to 5600 K
			170 - 170	Studio White (5600 K)
			171 - 210	5600 K to 6500 K
			211 - 211	Daylight White (6500 K)
			212 - 251	6500 K to Cold White
			252 - 255	Cold White
	15	Tint (affects Color Temperature) 1	000 - 000	Off
			001 - 127	Magenta -> neutral
			128 - 128	Neutral
			129 - 255	Neutral -> green
			000 - 005	No function
			006 - 009	46 Dark Magenta

OTOS® LC12

LED Wash-Moving Head

DMX CONTROL TABLE

				010	-	013	29 Plasa Red
				014	-	017	26 Bright Red
				018	-	021	127 Smokey Pink
				022	-	025	36 Medium Pink
				026	-	029	19 Fire
				030	-	033	135 Deep Golden Amber
				034	-	037	778 Millennium Gold
				038	-	041	21 Gold Amber
				042	-	045	157 Pink
				046	-	049	110 Middle Rose
				050	-	053	109 Light Salmon
				054	-	057	35 Light Pink
				058	-	061	134 Golden Amber
				062	-	065	17 Surprise Peach
				066	-	069	746 Brown
				070	-	073	105 Orange
				074	-	077	20 Medium Amber
				078	-	081	768 Egg Yolk Yellow
				082	-	085	15 Deep Straw
				086	-	089	767 Nectarine
				090	-	093	101 Yellow
				094	-	097	100 Spring Yellow
				098	-	101	88 Lime Green
				102	-	105	121 LEE Green
				106	-	109	738 Jas Green
				110	-	113	89 Moss Green
			Color Presets	114	-	117	139 Primary Green
		16	(override Color Mixing &	118	-	121	124 Dark Green
			Color Temperature) 1	122	-	125	323 Jade
				126	-	129	354 Special Steel Blue
				130	-	133	116 Medium Blue-Green
				134	-	137	183 Moonlight Blue
				138	-	141	132 Medium Blue
				142	-	145	119 Dark Blue
				146	-	149	716 Mikkel Blue
				150	-	153	71 Tokyo Blue
				154	-	157	181 Congo Blue
				158	-	161	799 Special KH Lavender
				162	-	165	707 Ultimate Violet
				166	-	169	343 Special Medium Lavender
				170	-	173	798 Chrysalis Pink
				174	-	177	701 Provence
				178	-	181	797 Deep Purple
				182	-	185	48 Rose Purple
				186	-	189	345 Fuchsia Pink

OTOS® LC12

LED Wash-Moving Head

DMX CONTROL TABLE

			190	-	193	795 Magical Magenta
			194	-	197	128 Bright Pink
			198	-	201	2 Rose Pink
			202	-	207	User colour 1
			208	-	213	User colour 2
			214	-	219	User colour 3
			220	-	225	User colour 4
			226	-	231	User colour 5
			232	-	237	User colour 6
			238	-	243	User colour 7
			244	-	249	User colour 8
			250	-	255	No function
	17	Color Crossfade (affects HSI, CCT and Color Presets) 1	000	-	005	0 s (off)
			006	-	105	0.1 s ... 10 s (0.1 s steps)
			106	-	214	11 s ... 119 s (1 s steps)
			215	-	244	2 m ... 4 m 50 s (10 s steps)
			245	-	255	5 m ... 15 m (1 m steps)
10	18	Line Dimmer 1	000	-	255	0 % ... 100 %
11	19	Line Strobe 1	000	-	005	Open
			006	-	010	Closed
			011	-	022	Ramp up/down slow to fast
			023	-	033	Ramp up/down random slow to fast
			034	-	045	Ramp up slow to fast
			046	-	056	Ramp up random slow to fast
			057	-	068	Ramp down slow to fast
			069	-	079	Ramp down random slow to fast
			080	-	102	Random strobe effect slow to fast
			103	-	127	Strobe break effect 5 s to 1 s (short burst with break)
			128	-	250	Strobe slow to fast (< 1 Hz to 20 Hz)
			251	-	255	Open
12	20	Line Top Red 1	000	-	255	0 % ... 100 %
13	21	Line Top Green 1	000	-	255	0 % ... 100 %
14	22	Line Top Blue 1	000	-	255	0 % ... 100 %
12	23	Line Bottom Red 1	000	-	255	0 % ... 100 %
13	24	Line Bottom Green 1	000	-	255	0 % ... 100 %
14	25	Line Bottom Blue 1	000	-	255	0 % ... 100 %
15	26	Zoom 1	000	-	255	Narrow to wide
16	27	Device settings	See channel 192 / 324 at the end of this table.			
17	28	Tilt 2	000	-	255	0 % ... 100 %
18	29	Tilt fine 2	000	-	255	
19	30	Dimmer 2	000	-	255	0 % ... 100 %
20	31	Dimmer fine 2	000	-	255	
			000	-	005	Open
			006	-	010	Closed

OTOS® LC12

LED Wash-Moving Head

DMX CONTROL TABLE

21	32	Strobe 2	011	-	022	Ramp up/down slow to fast
			023	-	033	Ramp up/down random slow to fast
			034	-	045	Ramp up slow to fast
			046	-	056	Ramp up random slow to fast
			057	-	068	Ramp down slow to fast
			069	-	079	Ramp down random slow to fast
			080	-	102	Random strobe effect slow to fast
			103	-	127	Strobe break effect 5 s to 1 s (short burst with break)
			128	-	250	Strobe slow to fast (< 1 Hz to 20 Hz)
			251	-	255	Open
22	33	Red 2	000	-	255	0 % ... 100 %
	34	Red fine 2	000	-	255	
23	35	Green 2	000	-	255	0 % ... 100 %
	36	Green fine 2	000	-	255	
24	37	Blue 2	000	-	255	0 % ... 100 %
	38	Blue fine 2	000	-	255	
25	39	Lime 2	000	-	255	0 % ... 100 %
	40	Lime fine 2	000	-	255	
	41	Color Temperature (affects Color Mixing) 2	000	-	005	Off
			006	-	006	Warm White
			007	-	046	Warm White to 2700 K
			047	-	047	Bulb White (2700 K)
			048	-	087	2700 K to 3200 K
			088	-	088	Halogen White (3200 K)
			089	-	128	3200 K to 4000 K
			129	-	129	Neutral White (4000 K)
			130	-	169	4000 K to 5600 K
			170	-	170	Studio White (5600 K)
			171	-	210	5600 K to 6500 K
			211	-	211	Daylight White (6500 K)
			212	-	251	6500 K to Cold White
			252	-	255	Cold White
	42	Tint (affects Color Temperature) 2	000	-	000	Off
			001	-	127	Magenta -> neutral
			128	-	128	Neutral
			129	-	255	Neutral -> green
			000	-	005	No function
			006	-	009	46 Dark Magenta
			010	-	013	29 Plasa Red
			014	-	017	26 Bright Red
			018	-	021	127 Smokey Pink
			022	-	025	36 Medium Pink
			026	-	029	19 Fire
			030	-	033	135 Deep Golden Amber

OTOS® LC12

LED Wash-Moving Head

DMX CONTROL TABLE

				034	-	037	778 Millennium Gold
				038	-	041	21 Gold Amber
				042	-	045	157 Pink
				046	-	049	110 Middle Rose
				050	-	053	109 Light Salmon
				054	-	057	35 Light Pink
				058	-	061	134 Golden Amber
				062	-	065	17 Surprise Peach
				066	-	069	746 Brown
				070	-	073	105 Orange
				074	-	077	20 Medium Amber
				078	-	081	768 Egg Yolk Yellow
				082	-	085	15 Deep Straw
				086	-	089	767 Nectarine
				090	-	093	101 Yellow
				094	-	097	100 Spring Yellow
				098	-	101	88 Lime Green
				102	-	105	121 LEE Green
				106	-	109	738 Jas Green
				110	-	113	89 Moss Green
			Color Presets	114	-	117	139 Primary Green
		43	(override Color Mixing &	118	-	121	124 Dark Green
			Color Temperature) 2	122	-	125	323 Jade
				126	-	129	354 Special Steel Blue
				130	-	133	116 Medium Blue-Green
				134	-	137	183 Moonlight Blue
				138	-	141	132 Medium Blue
				142	-	145	119 Dark Blue
				146	-	149	716 Mikkel Blue
				150	-	153	71 Tokyo Blue
				154	-	157	181 Congo Blue
				158	-	161	799 Special KH Lavender
				162	-	165	707 Ultimate Violet
				166	-	169	343 Special Medium Lavender
				170	-	173	798 Chrysalis Pink
				174	-	177	701 Provence
				178	-	181	797 Deep Purple
				182	-	185	48 Rose Purple
				186	-	189	345 Fuchsia Pink
				190	-	193	795 Magical Magenta
				194	-	197	128 Bright Pink
				198	-	201	2 Rose Pink
				202	-	207	User colour 1
				208	-	213	User colour 2
				214	-	219	User colour 3

OTOS® LC12

LED Wash-Moving Head

DMX CONTROL TABLE

			220	-	225	User colour 4
			226	-	231	User colour 5
			232	-	237	User colour 6
			238	-	243	User colour 7
			244	-	249	User colour 8
			250	-	255	No function
	44	Color Crossfade (affects HSI, CCT and Color Presets) 2	000	-	005	0 s (off)
			006	-	105	0.1 s ... 10 s (0.1 s steps)
			106	-	214	11 s ... 119 s (1 s steps)
			215	-	244	2 m ... 4 m 50 s (10 s steps)
			245	-	255	5 m ... 15 m (1 m steps)
26	45	Line Dimmer 2	000	-	255	0 % ... 100 %
27	46	Line Strobe 2	000	-	005	Open
			006	-	010	Closed
			011	-	022	Ramp up/down slow to fast
			023	-	033	Ramp up/down random slow to fast
			034	-	045	Ramp up slow to fast
			046	-	056	Ramp up random slow to fast
			057	-	068	Ramp down slow to fast
			069	-	079	Ramp down random slow to fast
			080	-	102	Random strobe effect slow to fast
			103	-	127	Strobe break effect 5 s to 1 s (short burst with break)
			128	-	250	Strobe slow to fast (< 1 Hz to 20 Hz)
			251	-	255	Open
28	47	Line Top Red 2	000	-	255	0 % ... 100 %
29	48	Line Top Green 2	000	-	255	0 % ... 100 %
30	49	Line Top Blue 2	000	-	255	0 % ... 100 %
28	50	Line Bottom Red 2	000	-	255	0 % ... 100 %
29	51	Line Bottom Green 2	000	-	255	0 % ... 100 %
30	52	Line Bottom Blue 2	000	-	255	0 % ... 100 %
31	53	Zoom 2	000	-	255	Narrow to wide
32	54	Device settings	See channel 192 / 324 at the end of this table.			
33	55	Tilt 3	000	-	255	0 % ... 100 %
34	56	Tilt fine 3	000	-	255	
35	57	Dimmer 3	000	-	255	0 % ... 100 %
36	58	Dimmer fine 3	000	-	255	
37	59	Strobe 3	000	-	005	Open
			006	-	010	Closed
			011	-	022	Ramp up/down slow to fast
			023	-	033	Ramp up/down random slow to fast
			034	-	045	Ramp up slow to fast
			046	-	056	Ramp up random slow to fast
			057	-	068	Ramp down slow to fast
			069	-	079	Ramp down random slow to fast

OTOS® LC12

LED Wash-Moving Head

DMX CONTROL TABLE

			080	-	102	Random strobe effect slow to fast
			103	-	127	Strobe break effect 5 s to 1 s (short burst with break)
			128	-	250	Strobe slow to fast (< 1 Hz to 20 Hz)
			251	-	255	Open
38	60	Red 3	000	-	255	0 % ... 100 %
	61	Red fine 3	000	-	255	
39	62	Green 3	000	-	255	0 % ... 100 %
	63	Green fine 3	000	-	255	
40	64	Blue 3	000	-	255	0 % ... 100 %
	65	Blue fine 3	000	-	255	
41	66	Lime 3	000	-	255	0 % ... 100 %
	67	Lime fine 3	000	-	255	
	68	Color Temperature (affects Color Mixing) 3	000	-	005	Off
			006	-	006	Warm White
			007	-	046	Warm White to 2700 K
			047	-	047	Bulb White (2700 K)
			048	-	087	2700 K to 3200 K
			088	-	088	Halogen White (3200 K)
			089	-	128	3200 K to 4000 K
			129	-	129	Neutral White (4000 K)
			130	-	169	4000 K to 5600 K
			170	-	170	Studio White (5600 K)
			171	-	210	5600 K to 6500 K
			211	-	211	Daylight White (6500 K)
			212	-	251	6500 K to Cold White
			252	-	255	Cold White
	69	Tint (affects Color Temperature) 3	000	-	000	Off
			001	-	127	Magenta -> neutral
			128	-	128	Neutral
			129	-	255	Neutral -> green
			000	-	005	No function
			006	-	009	46 Dark Magenta
			010	-	013	29 Plasa Red
			014	-	017	26 Bright Red
			018	-	021	127 Smokey Pink
			022	-	025	36 Medium Pink
			026	-	029	19 Fire
			030	-	033	135 Deep Golden Amber
			034	-	037	778 Millennium Gold
			038	-	041	21 Gold Amber
			042	-	045	157 Pink
			046	-	049	110 Middle Rose
			050	-	053	109 Light Salmon
			054	-	057	35 Light Pink

OTOS® LC12

LED Wash-Moving Head

DMX CONTROL TABLE

				058	-	061	134 Golden Amber
				062	-	065	17 Surprise Peach
				066	-	069	746 Brown
				070	-	073	105 Orange
				074	-	077	20 Medium Amber
				078	-	081	768 Egg Yolk Yellow
				082	-	085	15 Deep Straw
				086	-	089	767 Nectarine
				090	-	093	101 Yellow
				094	-	097	100 Spring Yellow
				098	-	101	88 Lime Green
				102	-	105	121 LEE Green
				106	-	109	738 Jas Green
				110	-	113	89 Moss Green
			Color Presets	114	-	117	139 Primary Green
		70	(override Color Mixing &	118	-	121	124 Dark Green
			Color Temperature) 3	122	-	125	323 Jade
				126	-	129	354 Special Steel Blue
				130	-	133	116 Medium Blue-Green
				134	-	137	183 Moonlight Blue
				138	-	141	132 Medium Blue
				142	-	145	119 Dark Blue
				146	-	149	716 Mikkel Blue
				150	-	153	71 Tokyo Blue
				154	-	157	181 Congo Blue
				158	-	161	799 Special KH Lavender
				162	-	165	707 Ultimate Violet
				166	-	169	343 Special Medium Lavender
				170	-	173	798 Chrysalis Pink
				174	-	177	701 Provence
				178	-	181	797 Deep Purple
				182	-	185	48 Rose Purple
				186	-	189	345 Fuchsia Pink
				190	-	193	795 Magical Magenta
				194	-	197	128 Bright Pink
				198	-	201	2 Rose Pink
				202	-	207	User colour 1
				208	-	213	User colour 2
				214	-	219	User colour 3
				220	-	225	User colour 4
				226	-	231	User colour 5
				232	-	237	User colour 6
				238	-	243	User colour 7
				244	-	249	User colour 8
				250	-	255	No function

OTOS® LC12

LED Wash-Moving Head

DMX CONTROL TABLE

	71	Color Crossfade (affects HSI, CCT and Color Presets) 3	000	-	005	0 s (off)
			006	-	105	0.1 s ... 10 s (0.1 s steps)
			106	-	214	11 s ... 119 s (1 s steps)
			215	-	244	2 m ... 4 m 50 s (10 s steps)
			245	-	255	5 m ... 15 m (1 m steps)
42	72	Line Dimmer 3	000	-	255	0 % ... 100 %
43	73	Line Strobe 3	000	-	005	Open
			006	-	010	Closed
			011	-	022	Ramp up/down slow to fast
			023	-	033	Ramp up/down random slow to fast
			034	-	045	Ramp up slow to fast
			046	-	056	Ramp up random slow to fast
			057	-	068	Ramp down slow to fast
			069	-	079	Ramp down random slow to fast
			080	-	102	Random strobe effect slow to fast
			103	-	127	Strobe break effect 5 s to 1 s (short burst with break)
			128	-	250	Strobe slow to fast (< 1 Hz to 20 Hz)
			251	-	255	Open
44	74	Line Top Red 3	000	-	255	0 % ... 100 %
45	75	Line Top Green 3	000	-	255	0 % ... 100 %
46	76	Line Top Blue 3	000	-	255	0 % ... 100 %
44	77	Line Bottom Red 3	000	-	255	0 % ... 100 %
45	78	Line Bottom Green 3	000	-	255	0 % ... 100 %
46	79	Line Bottom Blue 3	000	-	255	0 % ... 100 %
47	80	Zoom 3	000	-	255	Narrow to wide
48	81	Device settings	See channel 192 / 324 at the end of this table.			
49	82	Tilt 4	000	-	255	0 % ... 100 %
50	83	Tilt fine 4	000	-	255	
51	84	Dimmer 4	000	-	255	0 % ... 100 %
52	85	Dimmer fine 4	000	-	255	
53	86	Strobe 4	000	-	005	Open
			006	-	010	Closed
			011	-	022	Ramp up/down slow to fast
			023	-	033	Ramp up/down random slow to fast
			034	-	045	Ramp up slow to fast
			046	-	056	Ramp up random slow to fast
			057	-	068	Ramp down slow to fast
			069	-	079	Ramp down random slow to fast
			080	-	102	Random strobe effect slow to fast
			103	-	127	Strobe break effect 5 s to 1 s (short burst with break)
			128	-	250	Strobe slow to fast (< 1 Hz to 20 Hz)
			251	-	255	Open
54	87	Red 4	000	-	255	0 % ... 100 %

OTOS® LC12

LED Wash-Moving Head

DMX CONTROL TABLE

	88	Red fine 4	000 - 255	0 % ... 100 %
55	89	Green 4	000 - 255	0 % ... 100 %
	90	Green fine 4	000 - 255	
56	91	Blue 4	000 - 255	0 % ... 100 %
	92	Blue fine 4	000 - 255	
57	93	Lime 4	000 - 255	0 % ... 100 %
	94	Lime fine 4	000 - 255	
	95	Color Temperature (affects Color Mixing) 4	000 - 005	Off
			006 - 006	Warm White
			007 - 046	Warm White to 2700 K
			047 - 047	Bulb White (2700 K)
			048 - 087	2700 K to 3200 K
			088 - 088	Halogen White (3200 K)
			089 - 128	3200 K to 4000 K
			129 - 129	Neutral White (4000 K)
			130 - 169	4000 K to 5600 K
			170 - 170	Studio White (5600 K)
			171 - 210	5600 K to 6500 K
			211 - 211	Daylight White (6500 K)
			212 - 251	6500 K to Cold White
			252 - 255	Cold White
	96	Tint (affects Color Temperature) 4	000 - 000	Off
			001 - 127	Magenta -> neutral
			128 - 128	Neutral
			129 - 255	Neutral -> green
			000 - 005	No function
			006 - 009	46 Dark Magenta
			010 - 013	29 Plasa Red
			014 - 017	26 Bright Red
			018 - 021	127 Smokey Pink
			022 - 025	36 Medium Pink
			026 - 029	19 Fire
			030 - 033	135 Deep Golden Amber
			034 - 037	778 Millennium Gold
			038 - 041	21 Gold Amber
			042 - 045	157 Pink
			046 - 049	110 Middle Rose
			050 - 053	109 Light Salmon
			054 - 057	35 Light Pink
			058 - 061	134 Golden Amber
			062 - 065	17 Surprise Peach
			066 - 069	746 Brown
			070 - 073	105 Orange
			074 - 077	20 Medium Amber
			078 - 081	768 Egg Yolk Yellow

OTOS® LC12

LED Wash-Moving Head

DMX CONTROL TABLE

	97	Color Presets (override Color Mixing & Color Temperature) 4	082	-	085	15 Deep Straw
			086	-	089	767 Nectarine
			090	-	093	101 Yellow
			094	-	097	100 Spring Yellow
			098	-	101	88 Lime Green
			102	-	105	121 LEE Green
			106	-	109	738 Jas Green
			110	-	113	89 Moss Green
			114	-	117	139 Primary Green
			118	-	121	124 Dark Green
			122	-	125	323 Jade
			126	-	129	354 Special Steel Blue
			130	-	133	116 Medium Blue-Green
			134	-	137	183 Moonlight Blue
			138	-	141	132 Medium Blue
			142	-	145	119 Dark Blue
			146	-	149	716 Mikkel Blue
			150	-	153	71 Tokyo Blue
			154	-	157	181 Congo Blue
			158	-	161	799 Special KH Lavender
			162	-	165	707 Ultimate Violet
			166	-	169	343 Special Medium Lavender
			170	-	173	798 Chrysalis Pink
			174	-	177	701 Provence
			178	-	181	797 Deep Purple
			182	-	185	48 Rose Purple
			186	-	189	345 Fuchsia Pink
			190	-	193	795 Magical Magenta
			194	-	197	128 Bright Pink
			198	-	201	2 Rose Pink
			202	-	207	User colour 1
			208	-	213	User colour 2
			214	-	219	User colour 3
			220	-	225	User colour 4
			226	-	231	User colour 5
			232	-	237	User colour 6
			238	-	243	User colour 7
			244	-	249	User colour 8
			250	-	255	No function
	98	Color Crossfade (affects HSI, CCT and Color Presets) 4	000	-	005	0 s (off)
			006	-	105	0.1 s ... 10 s (0.1 s steps)
			106	-	214	11 s ... 119 s (1 s steps)
			215	-	244	2 m ... 4 m 50 s (10 s steps)
			245	-	255	5 m ... 15 m (1 m steps)
58	99	Line Dimmer 4	000	-	255	0 % ... 100 %

OTOS® LC12

LED Wash-Moving Head

DMX CONTROL TABLE

59	100	Line Strobe 4	000	-	005	Open
			006	-	010	Closed
			011	-	022	Ramp up/down slow to fast
			023	-	033	Ramp up/down random slow to fast
			034	-	045	Ramp up slow to fast
			046	-	056	Ramp up random slow to fast
			057	-	068	Ramp down slow to fast
			069	-	079	Ramp down random slow to fast
			080	-	102	Random strobe effect slow to fast
			103	-	127	Strobe break effect 5 s to 1 s (short burst with break)
			128	-	250	Strobe slow to fast (< 1 Hz to 20 Hz)
			251	-	255	Open
60	101	Line Top Red 4	000	-	255	0 % ... 100 %
61	102	Line Top Green 4	000	-	255	0 % ... 100 %
62	103	Line Top Blue 4	000	-	255	0 % ... 100 %
60	104	Line Bottom Red 4	000	-	255	0 % ... 100 %
61	105	Line Bottom Green 4	000	-	255	0 % ... 100 %
62	106	Line Bottom Blue 4	000	-	255	0 % ... 100 %
63	107	Zoom 4	000	-	255	Narrow to wide
64	108	Device settings	See channel 192 / 324 at the end of this table.			
65	109	Tilt 5	000	-	255	0 % ... 100 %
66	110	Tilt fine 5	000	-	255	
67	111	Dimmer 5	000	-	255	0 % ... 100 %
68	112	Dimmer fine 5	000	-	255	
69	113	Strobe 5	000	-	005	Open
			006	-	010	Closed
			011	-	022	Ramp up/down slow to fast
			023	-	033	Ramp up/down random slow to fast
			034	-	045	Ramp up slow to fast
			046	-	056	Ramp up random slow to fast
			057	-	068	Ramp down slow to fast
			069	-	079	Ramp down random slow to fast
			080	-	102	Random strobe effect slow to fast
			103	-	127	Strobe break effect 5 s to 1 s (short burst with break)
			128	-	250	Strobe slow to fast (< 1 Hz to 20 Hz)
			251	-	255	Open
70	114	Red 5	000	-	255	0 % ... 100 %
	115	Red fine 5	000	-	255	
71	116	Green 5	000	-	255	0 % ... 100 %
	117	Green fine 5	000	-	255	
72	118	Blue 5	000	-	255	0 % ... 100 %
	119	Blue fine 5	000	-	255	
73	120	Lime 5	000	-	255	0 % ... 100 %

OTOS® LC12

LED Wash-Moving Head

DMX CONTROL TABLE

	121	Lime fine 5	000	-	255	0 % ... 100 %
	122	Color Temperature (affects Color Mixing) 5	000	-	005	Off
			006	-	006	Warm White
			007	-	046	Warm White to 2700 K
			047	-	047	Bulb White (2700 K)
			048	-	087	2700 K to 3200 K
			088	-	088	Halogen White (3200 K)
			089	-	128	3200 K to 4000 K
			129	-	129	Neutral White (4000 K)
			130	-	169	4000 K to 5600 K
			170	-	170	Studio White (5600 K)
			171	-	210	5600 K to 6500 K
			211	-	211	Daylight White (6500 K)
			212	-	251	6500 K to Cold White
			252	-	255	Cold White
	123	Tint (affects Color Temperature) 5	000	-	000	Off
			001	-	127	Magenta -> neutral
			128	-	128	Neutral
			129	-	255	Neutral -> green
			000	-	005	No function
			006	-	009	46 Dark Magenta
			010	-	013	29 Plasa Red
			014	-	017	26 Bright Red
			018	-	021	127 Smokey Pink
			022	-	025	36 Medium Pink
			026	-	029	19 Fire
			030	-	033	135 Deep Golden Amber
			034	-	037	778 Millennium Gold
			038	-	041	21 Gold Amber
			042	-	045	157 Pink
			046	-	049	110 Middle Rose
			050	-	053	109 Light Salmon
			054	-	057	35 Light Pink
			058	-	061	134 Golden Amber
			062	-	065	17 Surprise Peach
			066	-	069	746 Brown
			070	-	073	105 Orange
			074	-	077	20 Medium Amber
			078	-	081	768 Egg Yolk Yellow
			082	-	085	15 Deep Straw
			086	-	089	767 Nectarine
			090	-	093	101 Yellow
			094	-	097	100 Spring Yellow
			098	-	101	88 Lime Green
			102	-	105	121 LEE Green

OTOS® LC12

LED Wash-Moving Head

DMX CONTROL TABLE

				106	-	109	738 Jas Green
				110	-	113	89 Moss Green
				114	-	117	139 Primary Green
		124	Color Presets (override Color Mixing & Color Temperature) 5	118	-	121	124 Dark Green
				122	-	125	323 Jade
				126	-	129	354 Special Steel Blue
				130	-	133	116 Medium Blue-Green
				134	-	137	183 Moonlight Blue
				138	-	141	132 Medium Blue
				142	-	145	119 Dark Blue
				146	-	149	716 Mikkel Blue
				150	-	153	71 Tokyo Blue
				154	-	157	181 Congo Blue
				158	-	161	799 Special KH Lavender
				162	-	165	707 Ultimate Violet
				166	-	169	343 Special Medium Lavender
				170	-	173	798 Chrysalis Pink
				174	-	177	701 Provence
				178	-	181	797 Deep Purple
				182	-	185	48 Rose Purple
				186	-	189	345 Fuchsia Pink
				190	-	193	795 Magical Magenta
				194	-	197	128 Bright Pink
				198	-	201	2 Rose Pink
				202	-	207	User colour 1
				208	-	213	User colour 2
				214	-	219	User colour 3
				220	-	225	User colour 4
				226	-	231	User colour 5
				232	-	237	User colour 6
				238	-	243	User colour 7
				244	-	249	User colour 8
				250	-	255	No function
				000	-	005	0 s (off)
				006	-	105	0.1 s ... 10 s (0.1 s steps)
		125	Color Crossfade (affects HSI, CCT and Color Presets) 5	106	-	214	11 s ... 119 s (1 s steps)
				215	-	244	2 m ... 4 m 50 s (10 s steps)
				245	-	255	5 m ... 15 m (1 m steps)
74		**126**	Line Dimmer 5	000	-	255	0 % ... 100 %
				000	-	005	Open
				006	-	010	Closed
				011	-	022	Ramp up/down slow to fast
				023	-	033	Ramp up/down random slow to fast
				034	-	045	Ramp up slow to fast
				046	-	056	Ramp up random slow to fast

OTOS® LC12

LED Wash-Moving Head

DMX CONTROL TABLE

75	**127**	Line Strobe 5	057	-	068	Ramp down slow to fast
			069	-	079	Ramp down random slow to fast
			080	-	102	Random strobe effect slow to fast
			103	-	127	Strobe break effect 5 s to 1 s (short burst with break)
			128	-	250	Strobe slow to fast (< 1 Hz to 20 Hz)
			251	-	255	Open
76	**128**	Line Top Red 5	000	-	255	0 % ... 100 %
77	**129**	Line Top Green 5	000	-	255	0 % ... 100 %
78	**130**	Line Top Blue 5	000	-	255	0 % ... 100 %
76	**131**	Line Bottom Red 5	000	-	255	0 % ... 100 %
77	**132**	Line Bottom Green 5	000	-	255	0 % ... 100 %
78	**133**	Line Bottom Blue 5	000	-	255	0 % ... 100 %
79	**134**	Zoom 5	000	-	255	Narrow to wide
80	**135**	Device settings	See channel 192 / 324 at the end of this table.			
81	**136**	Tilt 6	000	-	255	0 % ... 100 %
82	**137**	Tilt fine 6	000	-	255	
83	**138**	Dimmer 6	000	-	255	0 % ... 100 %
84	**139**	Dimmer fine 6	000	-	255	
85	**140**	Strobe 6	000	-	005	Open
			006	-	010	Closed
			011	-	022	Ramp up/down slow to fast
			023	-	033	Ramp up/down random slow to fast
			034	-	045	Ramp up slow to fast
			046	-	056	Ramp up random slow to fast
			057	-	068	Ramp down slow to fast
			069	-	079	Ramp down random slow to fast
			080	-	102	Random strobe effect slow to fast
			103	-	127	Strobe break effect 5 s to 1 s (short burst with break)
			128	-	250	Strobe slow to fast (< 1 Hz to 20 Hz)
			251	-	255	Open
86	**141**	Red 6	000	-	255	0 % ... 100 %
	142	Red fine 6	000	-	255	
87	**143**	Green 6	000	-	255	0 % ... 100 %
	144	Green fine 6	000	-	255	
88	**145**	Blue 6	000	-	255	0 % ... 100 %
	146	Blue fine 6	000	-	255	
89	**147**	Lime 6	000	-	255	0 % ... 100 %
	148	Lime fine 6	000	-	255	
			000	-	005	Off
			006	-	006	Warm White
			007	-	046	Warm White to 2700 K
			047	-	047	Bulb White (2700 K)
			048	-	087	2700 K to 3200 K

OTOS® LC12

LED Wash-Moving Head

DMX CONTROL TABLE

	149	Color Temperature (affects Color Mixing) 6	088	-	088	Halogen White (3200 K)
			089	-	128	3200 K to 4000 K
			129	-	129	Neutral White (4000 K)
			130	-	169	4000 K to 5600 K
			170	-	170	Studio White (5600 K)
			171	-	210	5600 K to 6500 K
			211	-	211	Daylight White (6500 K)
			212	-	251	6500 K to Cold White
			252	-	255	Cold White
	150	Tint (affects Color Temperature) 6	000	-	000	Off
			001	-	127	Magenta -> neutral
			128	-	128	Neutral
			129	-	255	Neutral -> green
	151	Color Presets (override Color Mixing & Color Temperature) 6	000	-	005	No function
			006	-	009	46 Dark Magenta
			010	-	013	29 Plasa Red
			014	-	017	26 Bright Red
			018	-	021	127 Smokey Pink
			022	-	025	36 Medium Pink
			026	-	029	19 Fire
			030	-	033	135 Deep Golden Amber
			034	-	037	778 Millennium Gold
			038	-	041	21 Gold Amber
			042	-	045	157 Pink
			046	-	049	110 Middle Rose
			050	-	053	109 Light Salmon
			054	-	057	35 Light Pink
			058	-	061	134 Golden Amber
			062	-	065	17 Surprise Peach
			066	-	069	746 Brown
			070	-	073	105 Orange
			074	-	077	20 Medium Amber
			078	-	081	768 Egg Yolk Yellow
			082	-	085	15 Deep Straw
			086	-	089	767 Nectarine
			090	-	093	101 Yellow
			094	-	097	100 Spring Yellow
			098	-	101	88 Lime Green
			102	-	105	121 LEE Green
			106	-	109	738 Jas Green
			110	-	113	89 Moss Green
			114	-	117	139 Primary Green
			118	-	121	124 Dark Green
			122	-	125	323 Jade
			126	-	129	354 Special Steel Blue

OTOS® LC12

LED Wash-Moving Head

DMX CONTROL TABLE

			130	-	133	116 Medium Blue-Green
			134	-	137	183 Moonlight Blue
			138	-	141	132 Medium Blue
			142	-	145	119 Dark Blue
			146	-	149	716 Mikkel Blue
			150	-	153	71 Tokyo Blue
			154	-	157	181 Congo Blue
			158	-	161	799 Special KH Lavender
			162	-	165	707 Ultimate Violet
			166	-	169	343 Special Medium Lavender
			170	-	173	798 Chrysalis Pink
			174	-	177	701 Provence
			178	-	181	797 Deep Purple
			182	-	185	48 Rose Purple
			186	-	189	345 Fuchsia Pink
			190	-	193	795 Magical Magenta
			194	-	197	128 Bright Pink
			198	-	201	2 Rose Pink
			202	-	207	User colour 1
			208	-	213	User colour 2
			214	-	219	User colour 3
			220	-	225	User colour 4
			226	-	231	User colour 5
			232	-	237	User colour 6
			238	-	243	User colour 7
			244	-	249	User colour 8
			250	-	255	No function
	152	Color Crossfade (affects HSI, CCT and Color Presets) 6	000	-	005	0 s (off)
			006	-	105	0,1 s ... 10 s (0,1 s steps)
			106	-	214	11 s ... 119 s (1 s steps)
			215	-	244	2 m ... 4 m 50 s (10 s steps)
			245	-	255	5 m ... 15 m (1 m steps)
90	**153**	Line Dimmer 6	000	-	255	0 % ... 100 %
91	**154**	Line Strobe 6	000	-	005	Open
			006	-	010	Closed
			011	-	022	Ramp up/down slow to fast
			023	-	033	Ramp up/down random slow to fast
			034	-	045	Ramp up slow to fast
			046	-	056	Ramp up random slow to fast
			057	-	068	Ramp down slow to fast
			069	-	079	Ramp down random slow to fast
			080	-	102	Random strobe effect slow to fast
			103	-	127	Strobe break effect 5 s to 1 s (short burst with break)
			128	-	250	Strobe slow to fast (< 1 Hz to 20 Hz)

OTOS® LC12

LED Wash-Moving Head

DMX CONTROL TABLE

			251	-	255	Open
92	155	Line Top Red 6	000	-	255	0 % ... 100 %
93	156	Line Top Green 6	000	-	255	0 % ... 100 %
94	157	Line Top Blue 6	000	-	255	0 % ... 100 %
92	158	Line Bottom Red 6	000	-	255	0 % ... 100 %
93	159	Line Bottom Green 6	000	-	255	0 % ... 100 %
94	160	Line Bottom Blue 6	000	-	255	0 % ... 100 %
95	161	Zoom 6	000	-	255	Narrow to wide
96	162	Device settings	See channel 192 / 324 at the end of this table.			
97	163	Tilt 7	000	-	255	0 % ... 100 %
98	164	Tilt fine 7	000	-	255	
99	165	Dimmer 7	000	-	255	0 % ... 100 %
100	166	Dimmer fine 7	000	-	255	
101	167	Strobe 7	000	-	005	Open
			006	-	010	Closed
			011	-	022	Ramp up/down slow to fast
			023	-	033	Ramp up/down random slow to fast
			034	-	045	Ramp up slow to fast
			046	-	056	Ramp up random slow to fast
			057	-	068	Ramp down slow to fast
			069	-	079	Ramp down random slow to fast
			080	-	102	Random strobe effect slow to fast
			103	-	127	Strobe break effect 5 s to 1 s (short burst with break)
			128	-	250	Strobe slow to fast (< 1 Hz to 20 Hz)
			251	-	255	Open
102	168	Red 7	000	-	255	0 % ... 100 %
	169	Red fine 7	000	-	255	
103	170	Green 7	000	-	255	0 % ... 100 %
	171	Green fine 7	000	-	255	
104	172	Blue 7	000	-	255	0 % ... 100 %
	173	Blue fine 7	000	-	255	
105	174	Lime 7	000	-	255	0 % ... 100 %
	175	Lime fine 7	000	-	255	
	176	Color Temperature (affects Color Mixing) 7	000	-	005	Off
			006	-	006	Warm White
			007	-	046	Warm White to 2700 K
			047	-	047	Bulb White (2700 K)
			048	-	087	2700 K to 3200 K
			088	-	088	Halogen White (3200 K)
			089	-	128	3200 K to 4000 K
			129	-	129	Neutral White (4000 K)
			130	-	169	4000 K to 5600 K
			170	-	170	Studio White (5600 K)
			171	-	210	5600 K to 6500 K

OTOS® LC12

LED Wash-Moving Head

DMX CONTROL TABLE

			211	-	211	Daylight White (6500 K)
			212	-	251	6500 K to Cold White
			252	-	255	Cold White
	177	Tint (affects Color Temperature) 7	000	-	000	Off
			001	-	127	Magenta -> neutral
			128	-	128	Neutral
			129	-	255	Neutral -> green
	178	Color Presets (override Color Mixing & Color Temperature) 7	000	-	005	No function
			006	-	009	46 Dark Magenta
			010	-	013	29 Plasa Red
			014	-	017	26 Bright Red
			018	-	021	127 Smokey Pink
			022	-	025	36 Medium Pink
			026	-	029	19 Fire
			030	-	033	135 Deep Golden Amber
			034	-	037	778 Millennium Gold
			038	-	041	21 Gold Amber
			042	-	045	157 Pink
			046	-	049	110 Middle Rose
			050	-	053	109 Light Salmon
			054	-	057	35 Light Pink
			058	-	061	134 Golden Amber
			062	-	065	17 Surprise Peach
			066	-	069	746 Brown
			070	-	073	105 Orange
			074	-	077	20 Medium Amber
			078	-	081	768 Egg Yolk Yellow
			082	-	085	15 Deep Straw
			086	-	089	767 Nectarine
			090	-	093	101 Yellow
			094	-	097	100 Spring Yellow
			098	-	101	88 Lime Green
			102	-	105	121 LEE Green
			106	-	109	738 Jas Green
			110	-	113	89 Moss Green
			114	-	117	139 Primary Green
			118	-	121	124 Dark Green
			122	-	125	323 Jade
			126	-	129	354 Special Steel Blue
			130	-	133	116 Medium Blue-Green
			134	-	137	183 Moonlight Blue
			138	-	141	132 Medium Blue
			142	-	145	119 Dark Blue
			146	-	149	716 Mikkel Blue
			150	-	153	71 Tokyo Blue

OTOS® LC12

LED Wash-Moving Head

DMX CONTROL TABLE

			154	-	157	181 Congo Blue
			158	-	161	799 Special KH Lavender
			162	-	165	707 Ultimate Violet
			166	-	169	343 Special Medium Lavender
			170	-	173	798 Chrysalis Pink
			174	-	177	701 Provence
			178	-	181	797 Deep Purple
			182	-	185	48 Rose Purple
			186	-	189	345 Fuchsia Pink
			190	-	193	795 Magical Magenta
			194	-	197	128 Bright Pink
			198	-	201	2 Rose Pink
			202	-	207	User colour 1
			208	-	213	User colour 2
			214	-	219	User colour 3
			220	-	225	User colour 4
			226	-	231	User colour 5
			232	-	237	User colour 6
			238	-	243	User colour 7
			244	-	249	User colour 8
			250	-	255	No function
			000	-	005	0 s (off)
		Color Crossfade	006	-	105	0.1 s ... 10 s (0.1 s steps)
	179	(affects HSI, CCT and	106	-	214	11 s ... 119 s (1 s steps)
		Color Presets) 7	215	-	244	2 m ... 4 m 50 s (10 s steps)
			245	-	255	5 m ... 15 m (1 m steps)
106	180	Line Dimmer 7	000	-	255	0 % ... 100 %
			000	-	005	Open
			006	-	010	Closed
			011	-	022	Ramp up/down slow to fast
			023	-	033	Ramp up/down random slow to fast
			034	-	045	Ramp up slow to fast
			046	-	056	Ramp up random slow to fast
107	181	Line Strobe 7	057	-	068	Ramp down slow to fast
			069	-	079	Ramp down random slow to fast
			080	-	102	Random strobe effect slow to fast
			103	-	127	Strobe break effect 5 s to 1 s (short burst with break)
			128	-	250	Strobe slow to fast (< 1 Hz to 20 Hz)
			251	-	255	Open
108	182	Line Top Red 7	000	-	255	0 % ... 100 %
109	183	Line Top Green 7	000	-	255	0 % ... 100 %
110	184	Line Top Blue 7	000	-	255	0 % ... 100 %
108	185	Line Bottom Red 7	000	-	255	0 % ... 100 %
109	186	Line Bottom Green 7	000	-	255	0 % ... 100 %

OTOS® LC12

LED Wash-Moving Head

DMX CONTROL TABLE

110	187	Line Bottom Blue 7	000 - 255	0 % ... 100 %
111	188	Zoom 7	000 - 255	Narrow to wide
112	189	Device settings	See channel 192 / 324 at the end of this table.	
113	190	Tilt 8	000 - 255	0 % ... 100 %
114	191	Tilt fine 8	000 - 255	
115	192	Dimmer 8	000 - 255	0 % ... 100 %
116	193	Dimmer fine 8	000 - 255	
117	194	Strobe 8	000 - 005	Open
			006 - 010	Closed
			011 - 022	Ramp up/down slow to fast
			023 - 033	Ramp up/down random slow to fast
			034 - 045	Ramp up slow to fast
			046 - 056	Ramp up random slow to fast
			057 - 068	Ramp down slow to fast
			069 - 079	Ramp down random slow to fast
			080 - 102	Random strobe effect slow to fast
			103 - 127	Strobe break effect 5 s to 1 s (short burst with break)
			128 - 250	Strobe slow to fast (< 1 Hz to 20 Hz)
			251 - 255	Open
118	195	Red 8	000 - 255	0 % ... 100 %
	196	Red fine 8	000 - 255	
119	197	Green 8	000 - 255	0 % ... 100 %
	198	Green fine 8	000 - 255	
120	199	Blue 8	000 - 255	0 % ... 100 %
	200	Blue fine 8	000 - 255	
121	201	Lime 8	000 - 255	0 % ... 100 %
	202	Lime fine 8	000 - 255	
	203	Color Temperature (affects Color Mixing) 8	000 - 005	Off
			006 - 006	Warm White
			007 - 046	Warm White to 2700 K
			047 - 047	Bulb White (2700 K)
			048 - 087	2700 K to 3200 K
			088 - 088	Halogen White (3200 K)
			089 - 128	3200 K to 4000 K
			129 - 129	Neutral White (4000 K)
			130 - 169	4000 K to 5600 K
			170 - 170	Studio White (5600 K)
			171 - 210	5600 K to 6500 K
			211 - 211	Daylight White (6500 K)
			212 - 251	6500 K to Cold White
			252 - 255	Cold White
	204	Tint (affects Color Temperature) 8	000 - 000	Off
			001 - 127	Magenta -> neutral
			128 - 128	Neutral

OTOS® LC12

LED Wash-Moving Head

DMX CONTROL TABLE

		Temperature) 8	129	-	255	Neutral -> green
			000	-	005	No function
			006	-	009	46 Dark Magenta
			010	-	013	29 Plasa Red
			014	-	017	26 Bright Red
			018	-	021	127 Smokey Pink
			022	-	025	36 Medium Pink
			026	-	029	19 Fire
			030	-	033	135 Deep Golden Amber
			034	-	037	778 Millennium Gold
			038	-	041	21 Gold Amber
			042	-	045	157 Pink
			046	-	049	110 Middle Rose
			050	-	053	109 Light Salmon
			054	-	057	35 Light Pink
			058	-	061	134 Golden Amber
			062	-	065	17 Surprise Peach
			066	-	069	746 Brown
			070	-	073	105 Orange
			074	-	077	20 Medium Amber
			078	-	081	768 Egg Yolk Yellow
			082	-	085	15 Deep Straw
			086	-	089	767 Nectarine
			090	-	093	101 Yellow
			094	-	097	100 Spring Yellow
			098	-	101	88 Lime Green
			102	-	105	121 LEE Green
			106	-	109	738 Jas Green
			110	-	113	89 Moss Green
		Color Presets	114	-	117	139 Primary Green
	205	(override Color Mixing &	118	-	121	124 Dark Green
		Color Temperature) 8	122	-	125	323 Jade
			126	-	129	354 Special Steel Blue
			130	-	133	116 Medium Blue-Green
			134	-	137	183 Moonlight Blue
			138	-	141	132 Medium Blue
			142	-	145	119 Dark Blue
			146	-	149	716 Mikkel Blue
			150	-	153	71 Tokyo Blue
			154	-	157	181 Congo Blue
			158	-	161	799 Special KH Lavender
			162	-	165	707 Ultimate Violet
			166	-	169	343 Special Medium Lavender
			170	-	173	798 Chrysalis Pink
			174	-	177	701 Provence

			178	-	181	797 Deep Purple
			182	-	185	48 Rose Purple
			186	-	189	345 Fuchsia Pink
			190	-	193	795 Magical Magenta
			194	-	197	128 Bright Pink
			198	-	201	2 Rose Pink
			202	-	207	User colour 1
			208	-	213	User colour 2
			214	-	219	User colour 3
			220	-	225	User colour 4
			226	-	231	User colour 5
			232	-	237	User colour 6
			238	-	243	User colour 7
			244	-	249	User colour 8
			250	-	255	No function
	206	Color Crossfade (affects HSI, CCT and Color Presets) 8	000	-	005	0 s (off)
			006	-	105	0.1 s ... 10 s (0.1 s steps)
			106	-	214	11 s ... 119 s (1 s steps)
			215	-	244	2 m ... 4 m 50 s (10 s steps)
			245	-	255	5 m ... 15 m (1 m steps)
122	**207**	Line Dimmer 8	000	-	255	0 % ... 100 %
123	**208**	Line Strobe 8	000	-	005	Open
			006	-	010	Closed
			011	-	022	Ramp up/down slow to fast
			023	-	033	Ramp up/down random slow to fast
			034	-	045	Ramp up slow to fast
			046	-	056	Ramp up random slow to fast
			057	-	068	Ramp down slow to fast
			069	-	079	Ramp down random slow to fast
			080	-	102	Random strobe effect slow to fast
			103	-	127	Strobe break effect 5 s to 1 s (short burst with break)
			128	-	250	Strobe slow to fast (< 1 Hz to 20 Hz)
			251	-	255	Open
124	**209**	Line Top Red 8	000	-	255	0 % ... 100 %
125	**210**	Line Top Green 8	000	-	255	0 % ... 100 %
126	**211**	Line Top Blue 8	000	-	255	0 % ... 100 %
124	**212**	Line Bottom Red 8	000	-	255	0 % ... 100 %
125	**213**	Line Bottom Green 8	000	-	255	0 % ... 100 %
126	**214**	Line Bottom Blue 8	000	-	255	0 % ... 100 %
127	**215**	Zoom 8	000	-	255	Narrow to wide
128	**216**	Device settings	See channel 192 / 324 at the end of this table.			
129	**217**	Tilt 9	000	-	255	0 % ... 100 %
130	**218**	Tilt fine 9	000	-	255	
131	**219**	Dimmer 9	000	-	255	0 % ... 100 %

OTOS® LC12

LED Wash-Moving Head

DMX CONTROL TABLE

132	220	Dimmer fine 9	000	-	255	0 % ... 100 %
133	221	Strobe 9	000	-	005	Open
			006	-	010	Closed
			011	-	022	Ramp up/down slow to fast
			023	-	033	Ramp up/down random slow to fast
			034	-	045	Ramp up slow to fast
			046	-	056	Ramp up random slow to fast
			057	-	068	Ramp down slow to fast
			069	-	079	Ramp down random slow to fast
			080	-	102	Random strobe effect slow to fast
			103	-	127	Strobe break effect 5 s to 1 s (short burst with break)
			128	-	250	Strobe slow to fast (< 1 Hz to 20 Hz)
			251	-	255	Open
134	222	Red 9	000	-	255	0 % ... 100 %
	223	Red fine 9	000	-	255	
135	224	Green 9	000	-	255	0 % ... 100 %
	225	Green fine 9	000	-	255	
136	226	Blue 9	000	-	255	0 % ... 100 %
	227	Blue fine 9	000	-	255	
137	228	Lime 9	000	-	255	0 % ... 100 %
	229	Lime fine 9	000	-	255	
	230	Color Temperature (affects Color Mixing) 9	000	-	005	Off
			006	-	006	Warm White
			007	-	046	Warm White to 2700 K
			047	-	047	Bulb White (2700 K)
			048	-	087	2700 K to 3200 K
			088	-	088	Halogen White (3200 K)
			089	-	128	3200 K to 4000 K
			129	-	129	Neutral White (4000 K)
			130	-	169	4000 K to 5600 K
			170	-	170	Studio White (5600 K)
			171	-	210	5600 K to 6500 K
			211	-	211	Daylight White (6500 K)
			212	-	251	6500 K to Cold White
			252	-	255	Cold White
	231	Tint (affects Color Temperature) 9	000	-	000	Off
			001	-	127	Magenta -> neutral
			128	-	128	Neutral
			129	-	255	Neutral -> green
			000	-	005	No function
			006	-	009	46 Dark Magenta
			010	-	013	29 Plasa Red
			014	-	017	26 Bright Red
			018	-	021	127 Smokey Pink

OTOS® LC12

LED Wash-Moving Head

DMX CONTROL TABLE

				022	-	025	36 Medium Pink
				026	-	029	19 Fire
				030	-	033	135 Deep Golden Amber
				034	-	037	778 Millennium Gold
				038	-	041	21 Gold Amber
				042	-	045	157 Pink
				046	-	049	110 Middle Rose
				050	-	053	109 Light Salmon
				054	-	057	35 Light Pink
				058	-	061	134 Golden Amber
				062	-	065	17 Surprise Peach
				066	-	069	746 Brown
				070	-	073	105 Orange
				074	-	077	20 Medium Amber
				078	-	081	768 Egg Yolk Yellow
				082	-	085	15 Deep Straw
				086	-	089	767 Nectarine
				090	-	093	101 Yellow
				094	-	097	100 Spring Yellow
				098	-	101	88 Lime Green
				102	-	105	121 LEE Green
				106	-	109	738 Jas Green
				110	-	113	89 Moss Green
			Color Presets	114	-	117	139 Primary Green
		232	(override Color Mixing &	118	-	121	124 Dark Green
			Color Temperature) 9	122	-	125	323 Jade
				126	-	129	354 Special Steel Blue
				130	-	133	116 Medium Blue-Green
				134	-	137	183 Moonlight Blue
				138	-	141	132 Medium Blue
				142	-	145	119 Dark Blue
				146	-	149	716 Mikkel Blue
				150	-	153	71 Tokyo Blue
				154	-	157	181 Congo Blue
				158	-	161	799 Special KH Lavender
				162	-	165	707 Ultimate Violet
				166	-	169	343 Special Medium Lavender
				170	-	173	798 Chrysalis Pink
				174	-	177	701 Provence
				178	-	181	797 Deep Purple
				182	-	185	48 Rose Purple
				186	-	189	345 Fuchsia Pink
				190	-	193	795 Magical Magenta
				194	-	197	128 Bright Pink
				198	-	201	2 Rose Pink

OTOS® LC12

LED Wash-Moving Head

DMX CONTROL TABLE

			202	-	207	User colour 1
			208	-	213	User colour 2
			214	-	219	User colour 3
			220	-	225	User colour 4
			226	-	231	User colour 5
			232	-	237	User colour 6
			238	-	243	User colour 7
			244	-	249	User colour 8
			250	-	255	No function
	233	Color Crossfade (affects HSI, CCT and Color Presets) 9	000	-	005	0 s (off)
			006	-	105	0.1 s ... 10 s (0.1 s steps)
			106	-	214	11 s ... 119 s (1 s steps)
			215	-	244	2 m ... 4 m 50 s (10 s steps)
			245	-	255	5 m ... 15 m (1 m steps)
138	234	Line Dimmer 9	000	-	255	0 % ... 100 %
139	235	Line Strobe 9	000	-	005	Open
			006	-	010	Closed
			011	-	022	Ramp up/down slow to fast
			023	-	033	Ramp up/down random slow to fast
			034	-	045	Ramp up slow to fast
			046	-	056	Ramp up random slow to fast
			057	-	068	Ramp down slow to fast
			069	-	079	Ramp down random slow to fast
			080	-	102	Random strobe effect slow to fast
			103	-	127	Strobe break effect 5 s to 1 s (short burst with break)
			128	-	250	Strobe slow to fast (< 1 Hz to 20 Hz)
			251	-	255	Open
140	236	Line Top Red 9	000	-	255	0 % ... 100 %
141	237	Line Top Green 9	000	-	255	0 % ... 100 %
142	238	Line Top Blue 9	000	-	255	0 % ... 100 %
140	239	Line Bottom Red 9	000	-	255	0 % ... 100 %
141	240	Line Bottom Green 9	000	-	255	0 % ... 100 %
142	241	Line Bottom Blue 9	000	-	255	0 % ... 100 %
143	242	Zoom 9	000	-	255	Narrow to wide
144	243	Device settings	See channel 192 / 324 at the end of this table.			
145	244	Tilt 10	000	-	255	0 % ... 100 %
146	245	Tilt fine 10	000	-	255	
147	246	Dimmer 10	000	-	255	0 % ... 100 %
148	247	Dimmer fine 10	000	-	255	
			000	-	005	Open
			006	-	010	Closed
			011	-	022	Ramp up/down slow to fast
			023	-	033	Ramp up/down random slow to fast
			034	-	045	Ramp up slow to fast

OTOS® LC12

LED Wash-Moving Head

DMX CONTROL TABLE

149	248	Strobe 10	046	-	056	Ramp up random slow to fast
			057	-	068	Ramp down slow to fast
			069	-	079	Ramp down random slow to fast
			080	-	102	Random strobe effect slow to fast
			103	-	127	Strobe break effect 5 s to 1 s (short burst with break)
			128	-	250	Strobe slow to fast (< 1 Hz to 20 Hz)
			251	-	255	Open
150	249	Red 10	000	-	255	0 % ... 100 %
	250	Red fine 10	000	-	255	
151	251	Green 10	000	-	255	0 % ... 100 %
	252	Green fine 10	000	-	255	
152	253	Blue 10	000	-	255	0 % ... 100 %
	254	Blue fine 10	000	-	255	
153	255	Lime 10	000	-	255	0 % ... 100 %
	256	Lime fine 10	000	-	255	
	257	Color Temperature (affects Color Mixing) 10	000	-	005	Off
			006	-	006	Warm White
			007	-	046	Warm White to 2700 K
			047	-	047	Bulb White (2700 K)
			048	-	087	2700 K to 3200 K
			088	-	088	Halogen White (3200 K)
			089	-	128	3200 K to 4000 K
			129	-	129	Neutral White (4000 K)
			130	-	169	4000 K to 5600 K
			170	-	170	Studio White (5600 K)
			171	-	210	5600 K to 6500 K
			211	-	211	Daylight White (6500 K)
			212	-	251	6500 K to Cold White
			252	-	255	Cold White
	258	Tint (affects Color Temperature) 10	000	-	000	Off
			001	-	127	Magenta -> neutral
			128	-	128	Neutral
			129	-	255	Neutral -> green
			000	-	005	No function
			006	-	009	46 Dark Magenta
			010	-	013	29 Plasa Red
			014	-	017	26 Bright Red
			018	-	021	127 Smokey Pink
			022	-	025	36 Medium Pink
			026	-	029	19 Fire
			030	-	033	135 Deep Golden Amber
			034	-	037	778 Millennium Gold
			038	-	041	21 Gold Amber
			042	-	045	157 Pink

OTOS® LC12

LED Wash-Moving Head

DMX CONTROL TABLE

				046	-	049	110 Middle Rose
				050	-	053	109 Light Salmon
				054	-	057	35 Light Pink
				058	-	061	134 Golden Amber
				062	-	065	17 Surprise Peach
				066	-	069	746 Brown
				070	-	073	105 Orange
				074	-	077	20 Medium Amber
				078	-	081	768 Egg Yolk Yellow
				082	-	085	15 Deep Straw
				086	-	089	767 Nectarine
				090	-	093	101 Yellow
				094	-	097	100 Spring Yellow
				098	-	101	88 Lime Green
				102	-	105	121 LEE Green
				106	-	109	738 Jas Green
				110	-	113	89 Moss Green
			Color Presets	114	-	117	139 Primary Green
		259	(override Color Mixing &	118	-	121	124 Dark Green
			Color Temperature) 10	122	-	125	323 Jade
				126	-	129	354 Special Steel Blue
				130	-	133	116 Medium Blue-Green
				134	-	137	183 Moonlight Blue
				138	-	141	132 Medium Blue
				142	-	145	119 Dark Blue
				146	-	149	716 Mikkel Blue
				150	-	153	71 Tokyo Blue
				154	-	157	181 Congo Blue
				158	-	161	799 Special KH Lavender
				162	-	165	707 Ultimate Violet
				166	-	169	343 Special Medium Lavender
				170	-	173	798 Chrysalis Pink
				174	-	177	701 Provence
				178	-	181	797 Deep Purple
				182	-	185	48 Rose Purple
				186	-	189	345 Fuchsia Pink
				190	-	193	795 Magical Magenta
				194	-	197	128 Bright Pink
				198	-	201	2 Rose Pink
				202	-	207	User colour 1
				208	-	213	User colour 2
				214	-	219	User colour 3
				220	-	225	User colour 4
				226	-	231	User colour 5
				232	-	237	User colour 6

OTOS® LC12

LED Wash-Moving Head

DMX CONTROL TABLE

			238	-	243	User colour 7
			244	-	249	User colour 8
			250	-	255	No function
	260	Color Crossfade (affects HSI, CCT and Color Presets) 10	000	-	005	0 s (off)
			006	-	105	0.1 s ... 10 s (0.1 s steps)
			106	-	214	11 s ... 119 s (1 s steps)
			215	-	244	2 m ... 4 m 50 s (10 s steps)
			245	-	255	5 m ... 15 m (1 m steps)
154	261	Line Dimmer 10	000	-	255	0 % ... 100 %
155	262	Line Strobe 10	000	-	005	Open
			006	-	010	Closed
			011	-	022	Ramp up/down slow to fast
			023	-	033	Ramp up/down random slow to fast
			034	-	045	Ramp up slow to fast
			046	-	056	Ramp up random slow to fast
			057	-	068	Ramp down slow to fast
			069	-	079	Ramp down random slow to fast
			080	-	102	Random strobe effect slow to fast
			103	-	127	Strobe break effect 5 s to 1 s (short burst with break)
			128	-	250	Strobe slow to fast (< 1 Hz to 20 Hz)
			251	-	255	Open
156	263	Line Top Red 10	000	-	255	0 % ... 100 %
157	264	Line Top Green 10	000	-	255	0 % ... 100 %
158	265	Line Top Blue 10	000	-	255	0 % ... 100 %
156	266	Line Bottom Red 10	000	-	255	0 % ... 100 %
157	267	Line Bottom Green 10	000	-	255	0 % ... 100 %
158	268	Line Bottom Blue 10	000	-	255	0 % ... 100 %
159	269	Zoom 10	000	-	255	Narrow to wide
160	270	Device settings	See channel 192 / 324 at the end of this table.			
161	271	Tilt 11	000	-	255	0 % ... 100 %
162	272	Tilt fine 11	000	-	255	
163	273	Dimmer 11	000	-	255	0 % ... 100 %
164	274	Dimmer fine 11	000	-	255	
165	275	Strobe 11	000	-	005	Open
			006	-	010	Closed
			011	-	022	Ramp up/down slow to fast
			023	-	033	Ramp up/down random slow to fast
			034	-	045	Ramp up slow to fast
			046	-	056	Ramp up random slow to fast
			057	-	068	Ramp down slow to fast
			069	-	079	Ramp down random slow to fast
			080	-	102	Random strobe effect slow to fast
			103	-	127	Strobe break effect 5 s to 1 s (short burst with break)

OTOS® LC12

LED Wash-Moving Head

DMX CONTROL TABLE

			128	-	250	Strobe slow to fast (< 1 Hz to 20 Hz)
			251	-	255	Open
166	**276**	Red 11	000	-	255	0 % ... 100 %
	277	Red fine 11	000	-	255	
167	**278**	Green 11	000	-	255	0 % ... 100 %
	279	Green fine 11	000	-	255	
168	**280**	Blue 11	000	-	255	0 % ... 100 %
	281	Blue fine 11	000	-	255	
169	**282**	Lime 11	000	-	255	0 % ... 100 %
	283	Lime fine 11	000	-	255	
	284	Color Temperature (affects Color Mixing) 11	000	-	005	Off
			006	-	006	Warm White
			007	-	046	Warm White to 2700 K
			047	-	047	Bulb White (2700 K)
			048	-	087	2700 K to 3200 K
			088	-	088	Halogen White (3200 K)
			089	-	128	3200 K to 4000 K
			129	-	129	Neutral White (4000 K)
			130	-	169	4000 K to 5600 K
			170	-	170	Studio White (5600 K)
			171	-	210	5600 K to 6500 K
			211	-	211	Daylight White (6500 K)
			212	-	251	6500 K to Cold White
			252	-	255	Cold White
	285	Tint (affects Color Temperature) 11	000	-	000	Off
			001	-	127	Magenta -> neutral
			128	-	128	Neutral
			129	-	255	Neutral -> green
			000	-	005	No function
			006	-	009	46 Dark Magenta
			010	-	013	29 Plasa Red
			014	-	017	26 Bright Red
			018	-	021	127 Smokey Pink
			022	-	025	36 Medium Pink
			026	-	029	19 Fire
			030	-	033	135 Deep Golden Amber
			034	-	037	778 Millennium Gold
			038	-	041	21 Gold Amber
			042	-	045	157 Pink
			046	-	049	110 Middle Rose
			050	-	053	109 Light Salmon
			054	-	057	35 Light Pink
			058	-	061	134 Golden Amber
			062	-	065	17 Surprise Peach
			066	-	069	746 Brown

OTOS® LC12

LED Wash-Moving Head

DMX CONTROL TABLE

				070	- 073	105 Orange
				074	- 077	20 Medium Amber
				078	- 081	768 Egg Yolk Yellow
				082	- 085	15 Deep Straw
				086	- 089	767 Nectarine
				090	- 093	101 Yellow
				094	- 097	100 Spring Yellow
				098	- 101	88 Lime Green
				102	- 105	121 LEE Green
				106	- 109	738 Jas Green
				110	- 113	89 Moss Green
			Color Presets	114	- 117	139 Primary Green
		286	(override Color Mixing &	118	- 121	124 Dark Green
			Color Temperature) 11	122	- 125	323 Jade
				126	- 129	354 Special Steel Blue
				130	- 133	116 Medium Blue-Green
				134	- 137	183 Moonlight Blue
				138	- 141	132 Medium Blue
				142	- 145	119 Dark Blue
				146	- 149	716 Mikkel Blue
				150	- 153	71 Tokyo Blue
				154	- 157	181 Congo Blue
				158	- 161	799 Special KH Lavender
				162	- 165	707 Ultimate Violet
				166	- 169	343 Special Medium Lavender
				170	- 173	798 Chrysalis Pink
				174	- 177	701 Provence
				178	- 181	797 Deep Purple
				182	- 185	48 Rose Purple
				186	- 189	345 Fuchsia Pink
				190	- 193	795 Magical Magenta
				194	- 197	128 Bright Pink
				198	- 201	2 Rose Pink
				202	- 207	User colour 1
				208	- 213	User colour 2
				214	- 219	User colour 3
				220	- 225	User colour 4
				226	- 231	User colour 5
				232	- 237	User colour 6
				238	- 243	User colour 7
				244	- 249	User colour 8
				250	- 255	No function
				000	- 005	0 s (off)
			Color Crossfade	006	- 105	0.1 s ... 10 s (0.1 s steps)
		287	(affects HSI, CCT and	106	- 214	11 s ... 119 s (1 s steps)

OTOS® LC12

LED Wash-Moving Head

DMX CONTROL TABLE

		Color Presets) 11	215	-	244	2 m ... 4 m 50 s (10 s steps)
			245	-	255	5 m ... 15 m (1 m steps)
170	**288**	Line Dimmer 11	000	-	255	0% to 100%
171	**289**	Line Strobe 11	000	-	005	Open
			006	-	010	Closed
			011	-	022	Ramp up/down slow to fast
			023	-	033	Ramp up/down random slow to fast
			034	-	045	Ramp up slow to fast
			046	-	056	Ramp up random slow to fast
			057	-	068	Ramp down slow to fast
			069	-	079	Ramp down random slow to fast
			080	-	102	Random strobe effect slow to fast
			103	-	127	Strobe break effect 5 s to 1 s (short burst with break)
			128	-	250	Strobe slow to fast (< 1 Hz to 20 Hz)
			251	-	255	Open
172	**290**	Line Top Red 11	000	-	255	0 % ... 100 %
173	**291**	Line Top Green 11	000	-	255	0 % ... 100 %
174	**292**	Line Top Blue 11	000	-	255	0 % ... 100 %
172	**293**	Line Bottom Red 11	000	-	255	0 % ... 100 %
173	**294**	Line Bottom Green 11	000	-	255	0 % ... 100 %
174	**295**	Line Bottom Blue 11	000	-	255	0 % ... 100 %
175	**296**	Zoom 11	000	-	255	Narrow to wide
176	**297**	Device settings	See channel 192 / 324 at the end of this table.			
177	**298**	Tilt 12	000	-	255	0 % ... 100 %
178	**299**	Tilt fine 12	000	-	255	
179	**300**	Dimmer 12	000	-	255	0 % ... 100 %
180	**301**	Dimmer fine 12	000	-	255	
181	**302**	Strobe 12	000	-	005	Open
			006	-	010	Closed
			011	-	022	Ramp up/down slow to fast
			023	-	033	Ramp up/down random slow to fast
			034	-	045	Ramp up slow to fast
			046	-	056	Ramp up random slow to fast
			057	-	068	Ramp down slow to fast
			069	-	079	Ramp down random slow to fast
			080	-	102	Random strobe effect slow to fast
			103	-	127	Strobe break effect 5 s to 1 s (short burst with break)
			128	-	250	Strobe slow to fast (< 1 Hz to 20 Hz)
			251	-	255	Open
182	**303**	Red 12	000	-	255	0 % ... 100 %
	304	Red fine 12	000	-	255	
183	**305**	Green 12	000	-	255	0 % ... 100 %
	306	Green fine 12	000	-	255	

OTOS® LC12

LED Wash-Moving Head

DMX CONTROL TABLE

184	307	Blue 12	000 - 255	0 % ... 100 %
	308	Blue fine 12	000 - 255	
185	309	Lime 12	000 - 255	0 % ... 100 %
	310	Lime fine 12	000 - 255	
	311	Color Temperature (affects Color Mixing) 12	000 - 005	Off
			006 - 006	Warm White
			007 - 046	Warm White to 2700 K
			047 - 047	Bulb White (2700 K)
			048 - 087	2700 K to 3200 K
			088 - 088	Halogen White (3200 K)
			089 - 128	3200 K to 4000 K
			129 - 129	Neutral White (4000 K)
			130 - 169	4000 K to 5600 K
			170 - 170	Studio White (5600 K)
			171 - 210	5600 K to 6500 K
			211 - 211	Daylight White (6500 K)
			212 - 251	6500 K to Cold White
			252 - 255	Cold White
	312	Tint (affects Color Temperature) 12	000 - 000	Off
			001 - 127	Magenta -> neutral
			128 - 128	Neutral
			129 - 255	Neutral -> green
			000 - 005	No function
			006 - 009	46 Dark Magenta
			010 - 013	29 Plasa Red
			014 - 017	26 Bright Red
			018 - 021	127 Smokey Pink
			022 - 025	36 Medium Pink
			026 - 029	19 Fire
			030 - 033	135 Deep Golden Amber
			034 - 037	778 Millennium Gold
			038 - 041	21 Gold Amber
			042 - 045	157 Pink
			046 - 049	110 Middle Rose
			050 - 053	109 Light Salmon
			054 - 057	35 Light Pink
			058 - 061	134 Golden Amber
			062 - 065	17 Surprise Peach
			066 - 069	746 Brown
			070 - 073	105 Orange
			074 - 077	20 Medium Amber
			078 - 081	768 Egg Yolk Yellow
			082 - 085	15 Deep Straw
			086 - 089	767 Nectarine
			090 - 093	101 Yellow

OTOS® LC12

LED Wash-Moving Head

DMX CONTROL TABLE

			094	-	097	100 Spring Yellow
			098	-	101	88 Lime Green
			102	-	105	121 LEE Green
			106	-	109	738 Jas Green
			110	-	113	89 Moss Green
		Color Presets	114	-	117	139 Primary Green
	313	(override Color Mixing &	118	-	121	124 Dark Green
		Color Temperature) 12	122	-	125	323 Jade
			126	-	129	354 Special Steel Blue
			130	-	133	116 Medium Blue-Green
			134	-	137	183 Moonlight Blue
			138	-	141	132 Medium Blue
			142	-	145	119 Dark Blue
			146	-	149	716 Mikkel Blue
			150	-	153	71 Tokyo Blue
			154	-	157	181 Congo Blue
			158	-	161	799 Special KH Lavender
			162	-	165	707 Ultimate Violet
			166	-	169	343 Special Medium Lavender
			170	-	173	798 Chrysalis Pink
			174	-	177	701 Provence
			178	-	181	797 Deep Purple
			182	-	185	48 Rose Purple
			186	-	189	345 Fuchsia Pink
			190	-	193	795 Magical Magenta
			194	-	197	128 Bright Pink
			198	-	201	2 Rose Pink
			202	-	207	User colour 1
			208	-	213	User colour 2
			214	-	219	User colour 3
			220	-	225	User colour 4
			226	-	231	User colour 5
			232	-	237	User colour 6
			238	-	243	User colour 7
			244	-	249	User colour 8
			250	-	255	No function
			000	-	005	0 s (off)
		Color Crossfade	006	-	105	0.1 s ... 10 s (0.1 s steps)
	314	(affects HSI, CCT and	106	-	214	11 s ... 119 s (1 s steps)
		Color Presets) 12	215	-	244	2 m ... 4 m 50 s (10 s steps)
			245	-	255	5 m ... 15 m (1 m steps)
186	315	Line Dimmer 12	000	-	255	0 % ... 100 %
			000	-	005	Open
			006	-	010	Closed
			011	-	022	Ramp up/down slow to fast

OTOS® LC12

LED Wash-Moving Head

DMX CONTROL TABLE

187	**316**	Line Strobe 12	023	-	033	Ramp up/down random slow to fast
			034	-	045	Ramp up slow to fast
			046	-	056	Ramp up random slow to fast
			057	-	068	Ramp down slow to fast
			069	-	079	Ramp down random slow to fast
			080	-	102	Random strobe effect slow to fast
			103	-	127	Strobe break effect 5 s to 1 s (short burst with break)
			128	-	250	Strobe slow to fast (< 1 Hz to 20 Hz)
			251	-	255	Open
188	**317**	Line Top Red 12	000	-	255	0 % ... 100 %
189	**318**	Line Top Green 12	000	-	255	0 % ... 100 %
190	**319**	Line Top Blue 12	000	-	255	0 % ... 100 %
188	**320**	Line Bottom Red 12	000	-	255	0 % ... 100 %
189	**321**	Line Bottom Green 12	000	-	255	0 % ... 100 %
190	**322**	Line Bottom Blue 12	000	-	255	0 % ... 100 %
191	**323**	Zoom 12	000	-	255	Narrow to wide
			000	-	005	No function
			006	-	007	Blackout while tilt moving on
			008	-	009	Blackout while tilt moving off
			010	-	013	No function
			014	-	015	Sun Protection On
			016	-	017	Sun Protection Off
			018	-	019	Sleep mode on
			020	-	021	Sleep mode off/wake up
			022	-	024	No function
			025	-	025	Record user scene 1
			026	-	026	Record user scene 2
			027	-	027	Record user scene 3
			028	-	028	Record user scene 4
			029	-	029	Record user scene 5
			030	-	030	Record user scene 6
			031	-	031	Record user scene 7
			032	-	032	Record user scene 8
			033	-	045	No function
			046	-	047	Invert tilt on
			048	-	049	Invert tilt off
			050	-	057	No function
			058	-	059	Pixel mirroring off
			060	-	065	Pixel mirroring on
			066	-	073	No function
			074	-	075	Dimmer response LED
			076	-	077	Dimmer response halogen
			078	-	081	No function
			082	-	083	DTW (redshift) on

OTOS® LC12

LED Wash-Moving Head

DMX CONTROL TABLE

192	**324**	Device settings (hold value for 3 seconds)	084	-	085	DTW (redshift) off
			086	-	093	No function
			094	-	095	Silent movement on
			096	-	097	Silent movement off
			098	-	099	Fan auto
			100	-	101	Fan off
			102	-	103	Fan constant low
			104	-	105	Fan constant medium
			106	-	107	Fan constant high
			108	-	119	No function
			120	-	121	PWM 1 (650 Hz)
			122	-	123	PWM 2 (1530 Hz)
			124	-	125	PWM 3 (3600 Hz)
			126	-	127	PWM 4 (12000 Hz)
			128	-	129	PWM 5 (18900 Hz)
			130	-	131	PWM 6 (25000 Hz)
			132	-	135	No function
			136	-	137	User calibration
			138	-	139	Smart calibration
			140	-	141	Display always on
			142	-	143	Display off after 20 s
			144	-	163	No function
			164	-	165	Dimmer curve linear
			166	-	167	Dimmer curve exponential
			168	-	169	Dimmer curve logarithmic
			170	-	171	Dimmer curve S-curve
			172	-	221	No function
			222	-	223	No function
			224	-	233	No function
			234	-	235	Reset head
			236	-	237	Reset all
			238	-	239	No function
			240	-	241	Load factory defaults
			242	-	243	No function
			244	-	245	Load user default A
			246	-	247	Load user default B
			248	-	249	Load user default C
			250	-	255	No function

54CH Dual Input Single Head

OTOS® LC12

LED Wash-Moving Head

DMX CONTROL TABLE

Channel	Function	Values	
1	Dimmer	000 - 255	0 % ... 100 %
2	Dimmer fine	000 - 255	
3	Strobe	000 - 005	Open
		006 - 010	Closed
		011 - 022	Ramp up/down slow to fast
		023 - 033	Ramp up/down random slow to fast
		034 - 045	Ramp up slow to fast
		046 - 056	Ramp up random slow to fast
		057 - 068	Ramp down slow to fast
		069 - 079	Ramp down random slow to fast
		080 - 102	Random strobe effect slow to fast
		103 - 127	Strobe break effect 5 s to 1 s (short burst with break)
		128 - 250	Strobe slow to fast (< 1 Hz to 20 Hz)
		251 - 255	Open
4	Red	000 - 255	0 % ... 100 %
5	Green	000 - 255	0 % ... 100 %
6	Blue	000 - 255	0 % ... 100 %
7	Lime	000 - 255	0 % ... 100 %
8	Color Temperature (affects Color Mixing)	000 - 005	Off
		006 - 006	Warm White
		007 - 046	Warm White to 2700 K
		047 - 047	Bulb White (2700 K)
		048 - 087	2700 K to 3200 K
		088 - 088	Halogen White (3200 K)
		089 - 128	3200 K to 4000 K
		129 - 129	Neutral White (4000 K)
		130 - 169	4000 K to 5600 K
		170 - 170	Studio White (5600 K)
		171 - 210	5600 K to 6500 K
		211 - 211	Daylight White (6500 K)
		212 - 251	6500 K to Cold White
		252 - 255	Cold White
9	Tint (affects Color Temperature)	000 - 000	Off
		001 - 127	Magenta -> neutral
		128 - 128	Neutral
		129 - 255	Neutral -> green
		000 - 005	No function
		006 - 009	46 Dark Magenta
		010 - 013	29 Plasa Red
		014 - 017	26 Bright Red
		018 - 021	127 Smokey Pink
		022 - 025	36 Medium Pink

OTOS® LC12

LED Wash-Moving Head

DMX CONTROL TABLE

10	Color Presets (override Color Mixing & Color Temperature)	026	-	029	19 Fire
		030	-	033	135 Deep Golden Amber
		034	-	037	778 Millennium Gold
		038	-	041	21 Gold Amber
		042	-	045	157 Pink
		046	-	049	110 Middle Rose
		050	-	053	109 Light Salmon
		054	-	057	35 Light Pink
		058	-	061	134 Golden Amber
		062	-	065	17 Surprise Peach
		066	-	069	746 Brown
		070	-	073	105 Orange
		074	-	077	20 Medium Amber
		078	-	081	768 Egg Yolk Yellow
		082	-	085	15 Deep Straw
		086	-	089	767 Nectarine
		090	-	093	101 Yellow
		094	-	097	100 Spring Yellow
		098	-	101	88 Lime Green
		102	-	105	121 LEE Green
		106	-	109	738 Jas Green
		110	-	113	89 Moss Green
		114	-	117	139 Primary Green
		118	-	121	124 Dark Green
		122	-	125	323 Jade
		126	-	129	354 Special Steel Blue
		130	-	133	116 Medium Blue-Green
		134	-	137	183 Moonlight Blue
		138	-	141	132 Medium Blue
		142	-	145	119 Dark Blue
		146	-	149	716 Mikkel Blue
		150	-	153	71 Tokyo Blue
		154	-	157	181 Congo Blue
		158	-	161	799 Special KH Lavender
		162	-	165	707 Ultimate Violet
		166	-	169	343 Special Medium Lavender
		170	-	173	798 Chrysalis Pink
		174	-	177	701 Provence
		178	-	181	797 Deep Purple
		182	-	185	48 Rose Purple
		186	-	189	345 Fuchsia Pink
		190	-	193	795 Magical Magenta
		194	-	197	128 Bright Pink
		198	-	201	2 Rose Pink
		202	-	255	No function

OTOS® LC12

LED Wash-Moving Head

DMX CONTROL TABLE

11	Color Crossfade (affects HSI, CCT and Color Presets)	000	-	005	0 s (off)
		006	-	105	0.1 s ... 10 s (0.1 s steps)
		106	-	214	11 s ... 119 s (1 s steps)
		215	-	244	2 m ... 4 m 50 s (10 s steps)
		245	-	255	5 m ... 15 m (1 m steps)
12	Line Dimmer	000	-	255	0 % ... 100 %
13	Line Strobe	000	-	005	Open
		006	-	010	Closed
		011	-	022	Ramp up/down slow to fast
		023	-	033	Ramp up/down random slow to fast
		034	-	045	Ramp up slow to fast
		046	-	056	Ramp up random slow to fast
		057	-	068	Ramp down slow to fast
		069	-	079	Ramp down random slow to fast
		080	-	102	Random strobe effect slow to fast
		103	-	127	Strobe break effect 5 s to 1 s (short burst with break)
		128	-	250	Strobe slow to fast (< 1 Hz to 20 Hz)
		251	-	255	Open
14	Line Red	000	-	255	0 % ... 100 %
15	Line Green	000	-	255	0 % ... 100 %
16	Line Blue	000	-	255	0 % ... 100 %
17	LED Control Crossfade	000	-	005	Pixel controlled by channels 4 to 11 and 14 to 16
		006	-	249	Linear crossfade to second input
		250	-	255	Pixel controlled by second protocol
		000	-	005	No function
		006	-	007	Blackout while tilt moving on
		008	-	009	Blackout while tilt moving off
		010	-	013	No function
		014	-	015	Sun Protection On
		016	-	017	Sun Protection Off
		018	-	019	Sleep mode on
		020	-	021	Sleep mode off/wake up
		022	-	024	No function
		025	-	025	Record user scene 1
		026	-	026	Record user scene 2
		027	-	027	Record user scene 3
		028	-	028	Record user scene 4
		029	-	029	Record user scene 5
		030	-	030	Record user scene 6
		031	-	031	Record user scene 7
		032	-	032	Record user scene 8
		033	-	045	No function
		046	-	047	Invert tilt on

OTOS® LC12

LED Wash-Moving Head

DMX CONTROL TABLE

	18	Device settings (hold value for 3 seconds)	048	-	049	Invert tilt off
			050	-	057	No function
			058	-	059	Pixel mirroring off
			060	-	065	Pixel mirroring on
			066	-	073	No function
			074	-	075	Dimmer response LED
			076	-	077	Dimmer response halogen
			078	-	081	No function
			082	-	083	DTW (redshift) on
			084	-	085	DTW (redshift) off
			086	-	093	No function
			094	-	095	Silent movement on
			096	-	097	Silent movement off
			098	-	099	Fan auto
			100	-	101	Fan off
			102	-	103	Fan constant low
			104	-	105	Fan constant medium
			106	-	107	Fan constant high
			108	-	119	No function
			120	-	121	PWM 1 (650 Hz)
			122	-	123	PWM 2 (1530 Hz)
			124	-	125	PWM 3 (3600 Hz)
			126	-	127	PWM 4 (12000 Hz)
			128	-	129	PWM 5 (18900 Hz)
			130	-	131	PWM 6 (25000 Hz)
			132	-	135	No function
			136	-	137	User calibration
			138	-	139	Smart calibration
			140	-	141	Display always on
			142	-	143	Display off after 20 s
			144	-	163	No function
			164	-	165	Dimmer curve linear
			166	-	167	Dimmer curve exponential
			168	-	169	Dimmer curve logarithmic
			170	-	171	Dimmer curve S-curve
			172	-	221	No function
			222	-	223	No function
			224	-	233	No function
			234	-	235	Reset head
			236	-	237	Reset all
			238	-	239	No function
			240	-	241	Load factory defaults
			242	-	243	No function
			244	-	245	Load user default A
			246	-	247	Load user default B

OTOS® LC12

LED Wash-Moving Head

DMX CONTROL TABLE

		248 - 249	Load user default C
		250 - 255	No function
19	Tilt 1	000 - 255	0 % ... 100 %
20	Tilt fine 1	000 - 255	
21	Zoom 1	000 - 255	Narrow to wide
22	Tilt 2	000 - 255	0 % ... 100 %
23	Tilt fine 2	000 - 255	
24	Zoom 2	000 - 255	Narrow to wide
25	Tilt 3	000 - 255	0 % ... 100 %
26	Tilt fine 3	000 - 255	
27	Zoom 3	000 - 255	Narrow to wide
28	Tilt 4	000 - 255	0 % ... 100 %
29	Tilt fine 4	000 - 255	
30	Zoom 4	000 - 255	Narrow to wide
31	Tilt 5	000 - 255	0 % ... 100 %
32	Tilt fine 5	000 - 255	
33	Zoom 5	000 - 255	Narrow to wide
34	Tilt 6	000 - 255	0 % ... 100 %
35	Tilt fine 6	000 - 255	
36	Zoom 6	000 - 255	Narrow to wide
37	Tilt 7	000 - 255	0 % ... 100 %
38	Tilt fine 7	000 - 255	
39	Zoom 7	000 - 255	Narrow to wide
40	Tilt 8	000 - 255	0 % ... 100 %
41	Tilt fine 8	000 - 255	
42	Zoom 8	000 - 255	Narrow to wide
43	Tilt 9	000 - 255	0 % ... 100 %
44	Tilt fine 9	000 - 255	
45	Zoom 9	000 - 255	Narrow to wide
46	Tilt 10	000 - 255	0 % ... 100 %
47	Tilt fine 10	000 - 255	
48	Zoom 10	000 - 255	Narrow to wide
49	Tilt 11	000 - 255	0 % ... 100 %
50	Tilt fine 11	000 - 255	
51	Zoom 11	000 - 255	Narrow to wide
52	Tilt 12	000 - 255	0 % ... 100 %
53	Tilt fine 12	000 - 255	
54	Zoom 12	000 - 255	Narrow to wide
55	Red 1	000 - 255	0 % ... 100 %
56	Green 1	000 - 255	0 % ... 100 %
57	Blue 1	000 - 255	0 % ... 100 %
58	Lime 1	000 - 255	0 % ... 100 %
59	Red 2	000 - 255	0 % ... 100 %
60	Green 2	000 - 255	0 % ... 100 %

OTOS® LC12

LED Wash-Moving Head

DMX CONTROL TABLE

61	Blue 2	000 - 255	0 % ... 100 %
62	Lime 2	000 - 255	0 % ... 100 %
63	Red 3	000 - 255	0 % ... 100 %
64	Green 3	000 - 255	0 % ... 100 %
65	Blue 3	000 - 255	0 % ... 100 %
66	Lime 3	000 - 255	0 % ... 100 %
67	Red 4	000 - 255	0 % ... 100 %
68	Green 4	000 - 255	0 % ... 100 %
69	Blue 4	000 - 255	0 % ... 100 %
70	Lime 4	000 - 255	0 % ... 100 %
71	Red 5	000 - 255	0 % ... 100 %
72	Green 5	000 - 255	0 % ... 100 %
73	Blue 5	000 - 255	0 % ... 100 %
74	Lime 5	000 - 255	0 % ... 100 %
75	Red 6	000 - 255	0 % ... 100 %
76	Green 6	000 - 255	0 % ... 100 %
77	Blue 6	000 - 255	0 % ... 100 %
78	Lime 6	000 - 255	0 % ... 100 %
79	Red 7	000 - 255	0 % ... 100 %
80	Green 7	000 - 255	0 % ... 100 %
81	Blue 7	000 - 255	0 % ... 100 %
82	Lime 7	000 - 255	0 % ... 100 %
83	Red 8	000 - 255	0 % ... 100 %
84	Green 8	000 - 255	0 % ... 100 %
85	Blue 8	000 - 255	0 % ... 100 %
86	Lime 8	000 - 255	0 % ... 100 %
87	Red 9	000 - 255	0 % ... 100 %
88	Green 9	000 - 255	0 % ... 100 %
89	Blue 9	000 - 255	0 % ... 100 %
90	Lime 9	000 - 255	0 % ... 100 %
91	Red 10	000 - 255	0 % ... 100 %
92	Green 10	000 - 255	0 % ... 100 %
93	Blue 10	000 - 255	0 % ... 100 %
94	Lime 10	000 - 255	0 % ... 100 %
95	Red 11	000 - 255	0 % ... 100 %
96	Green 11	000 - 255	0 % ... 100 %
97	Blue 11	000 - 255	0 % ... 100 %
98	Lime 11	000 - 255	0 % ... 100 %
99	Red 12	000 - 255	0 % ... 100 %
100	Green 12	000 - 255	0 % ... 100 %
101	Blue 12	000 - 255	0 % ... 100 %
102	Lime 12	000 - 255	0 % ... 100 %
103	Line Top Red 1	000 - 255	0 % ... 100 %
104	Line Top Green 1	000 - 255	0 % ... 100 %
105	Line Top Blue 1	000 - 255	0 % ... 100 %

OTOS® LC12

LED Wash-Moving Head

DMX CONTROL TABLE

106	Line Top Red 2	000 - 255	0 % ... 100 %
107	Line Top Green 2	000 - 255	0 % ... 100 %
108	Line Top Blue 2	000 - 255	0 % ... 100 %
109	Line Top Red 3	000 - 255	0 % ... 100 %
110	Line Top Green 3	000 - 255	0 % ... 100 %
111	Line Top Blue 3	000 - 255	0 % ... 100 %
112	Line Top Red 4	000 - 255	0 % ... 100 %
113	Line Top Green 4	000 - 255	0 % ... 100 %
114	Line Top Blue 4	000 - 255	0 % ... 100 %
115	Line Top Red 5	000 - 255	0 % ... 100 %
116	Line Top Green 5	000 - 255	0 % ... 100 %
117	Line Top Blue 5	000 - 255	0 % ... 100 %
118	Line Top Red 6	000 - 255	0 % ... 100 %
119	Line Top Green 6	000 - 255	0 % ... 100 %
120	Line Top Blue 6	000 - 255	0 % ... 100 %
121	Line Top Red 7	000 - 255	0 % ... 100 %
122	Line Top Green 7	000 - 255	0 % ... 100 %
123	Line Top Blue 7	000 - 255	0 % ... 100 %
124	Line Top Red 8	000 - 255	0 % ... 100 %
125	Line Top Green 8	000 - 255	0 % ... 100 %
126	Line Top Blue 8	000 - 255	0 % ... 100 %
127	Line Top Red 9	000 - 255	0 % ... 100 %
128	Line Top Green 9	000 - 255	0 % ... 100 %
129	Line Top Blue 9	000 - 255	0 % ... 100 %
130	Line Top Red 10	000 - 255	0 % ... 100 %
131	Line Top Green 10	000 - 255	0 % ... 100 %
132	Line Top Blue 10	000 - 255	0 % ... 100 %
133	Line Top Red 11	000 - 255	0 % ... 100 %
134	Line Top Green 11	000 - 255	0 % ... 100 %
135	Line Top Blue 11	000 - 255	0 % ... 100 %
136	Line Top Red 12	000 - 255	0 % ... 100 %
137	Line Top Green 12	000 - 255	0 % ... 100 %
138	Line Top Blue 12	000 - 255	0 % ... 100 %
139	Line Bottom Red 1	000 - 255	0 % ... 100 %
140	Line Bottom Green 1	000 - 255	0 % ... 100 %
141	Line Bottom Blue 1	000 - 255	0 % ... 100 %
142	Line Bottom Red 2	000 - 255	0 % ... 100 %
143	Line Bottom Green 2	000 - 255	0 % ... 100 %
144	Line Bottom Blue 2	000 - 255	0 % ... 100 %
145	Line Bottom Red 3	000 - 255	0 % ... 100 %
146	Line Bottom Green 3	000 - 255	0 % ... 100 %
147	Line Bottom Blue 3	000 - 255	0 % ... 100 %
148	Line Bottom Red 4	000 - 255	0 % ... 100 %
149	Line Bottom Green 4	000 - 255	0 % ... 100 %

OTOS® LC12

LED Wash-Moving Head

DMX CONTROL TABLE

150	Line Bottom Blue 4	000 - 255	0 % ... 100 %
151	Line Bottom Red 5	000 - 255	0 % ... 100 %
152	Line Bottom Green 5	000 - 255	0 % ... 100 %
153	Line Bottom Blue 5	000 - 255	0 % ... 100 %
154	Line Bottom Red 6	000 - 255	0 % ... 100 %
155	Line Bottom Green 6	000 - 255	0 % ... 100 %
156	Line Bottom Blue 6	000 - 255	0 % ... 100 %
157	Line Bottom Red 7	000 - 255	0 % ... 100 %
158	Line Bottom Green 7	000 - 255	0 % ... 100 %
159	Line Bottom Blue 7	000 - 255	0 % ... 100 %
160	Line Bottom Red 8	000 - 255	0 % ... 100 %
161	Line Bottom Green 8	000 - 255	0 % ... 100 %
162	Line Bottom Blue 8	000 - 255	0 % ... 100 %
163	Line Bottom Red 9	000 - 255	0 % ... 100 %
164	Line Bottom Green 9	000 - 255	0 % ... 100 %
165	Line Bottom Blue 9	000 - 255	0 % ... 100 %
166	Line Bottom Red 10	000 - 255	0 % ... 100 %
167	Line Bottom Green 10	000 - 255	0 % ... 100 %
168	Line Bottom Blue 10	000 - 255	0 % ... 100 %
169	Line Bottom Red 11	000 - 255	0 % ... 100 %
170	Line Bottom Green 11	000 - 255	0 % ... 100 %
171	Line Bottom Blue 11	000 - 255	0 % ... 100 %
172	Line Bottom Red 12	000 - 255	0 % ... 100 %
173	Line Bottom Green 12	000 - 255	0 % ... 100 %
174	Line Bottom Blue 12	000 - 255	0 % ... 100 %

INDEX

A

Art-Net 38
Assembly
- Multiple devices 23
- One Omega bracket 25
- Tilt lock cover 22
- Two Omega brackets 27

C

Cleaning 46
Customer Service 7

D

Disconnecting power supply 28
DMX
- Start address 30
- Technology 19
- W-DMX status 34

M

Mains power cable 28

N

Navigating 29
Network 38

O

Omega Bracket 25, 27
Overview
- Main screen DMX/W-DMX mode 34
- Main screen Art+DMX mode 35
- Main screen slave mode 36
- Main screen stand-alone mode 36
- Product 16
- User interface 17

P

Power supply 28
powerCON® 28

Q

Quicklight 33

S

Scope of delivery 22
Slave mode 31, 36
Stand-alone mode 31, 36
Storing 47
Submenu
- Art-Net 38
- Colour calibration 41
- Dimmer 41
- Display 40
- Fan 42
- Movement 41
- Network sACN 38
- Pixel mirror 42
- Signal fail 42
- Stand-alone 38
- Sun protection 42
- Wireless 39

Sun protection 42

T

Technical Data 16
Tilt lock cover 22

U

User interface 17

cameo

9007199643701771