USER MANUAL

Palmer®
be true to your sound



ORBIT 11

ACTIVE COAXIAL 3-WAY STUDIO MONITOR

PORBIT11(W);

en-GB

TABLE OF CONTENTS

1 DOCUMENT VERSION AND REVISIONS 5

2 INTRODUCTION 6

2.1 You Made the Right Choice! 6

2.2 Contacts 6

2.3 Link to the Download Centre 6

2.4 Visualisation Conventions in This User Manual 7

3 PRODUCT COMPLIANCE 8

3.1 Manufacturer's Declaration 8

3.2 Declaration of Conformity 8

4 SAFETY INSTRUCTIONS 10

4.1 Intended Use 10

4.2 Explanation of Safety and Warning Symbols 10

4.3 Structure of Warning Messages 11

4.4 General Safety 11

4.5 Electrical Safety 12

4.6 Thermal Safety 13

4.7 Device Safety 13

5 PRODUCT DESCRIPTION 14

5.1 Product Overview 14

5.2 Optional Accessories 14

5.3 Technical Data 15

5.4 User Interface 18

5.5 Front LED 19

6 PREPARATION 20

6.1 Scope of Delivery 20

7 INSTALLATION 21

7.1 About Positioning Studio Monitors 21

7.2 Positioning Use Cases 22

7.3 Attaching the Eye Bolt 25

7.4 Attaching the Wall Mount 26

7.4.1 Removing the Device Feet 27

8 OPERATION 28
8.1 Power Supply 28
8.1.1 Power Connection 28
8.1.2 Connecting a Mains Power Cable 28
8.1.3 Turning the Device on or off 29
8.2 Navigating the Device 29
8.2.1 Using the Menu Button 29
8.2.2 Using the Arrow Buttons 29
8.3 Audio Connections 30
8.4 Input Connections 31
8.4.1 Connecting an Input Source to the Analog Input 31
8.4.2 Connecting an Input Source to the AES3 Input 31
8.5 Audio Playback 32
8.5.1 Setting the PAD 32
8.5.2 Setting the Equaliser Bands 32
8.5.3 Setting the Adaptation Filters 33
8.5.3.1 Setting the Adaptation Filter DESK 33
8.5.3.2 Setting the Adaptation Filter REAR WALL 33
8.5.3.3 Activating the High-pass Filter (HPF) 34
8.5.4 Setting the Input Source 34
8.6 Output Connections 35
8.6.1 Connecting a Second ORBIT 11 via AES3 Output 35
9 MAINTENANCE 36
9.1 Product Maintenance 36
9.2 Storing the Device 36
9.3 Troubleshooting 37
10 REPAIR 38
11 DISPOSAL 39
11.1 Packaging Disposal 39
11.2 Device Disposal 39
INDEX 40

1 DOCUMENT VERSION AND REVISIONS

Version	Date	Implemented changes
v1.0	11/2025	Original version
v1.1	10/2026	Corrected REAR WALL filter frequency and gain values in technical data.

2 INTRODUCTION

2.1 YOU MADE THE RIGHT CHOICE!

This product has been developed and manufactured to the highest quality standards to ensure many years of problem-free operation. Find further information about Palmer on our website:
https://www.palmer-germany.com/

2.2 CONTACTS

	Adam Hall GmbH Headquarter	**Customer Service**
E-mail	info@adamhall.com	customerservice@adam-hall.com
Phone	+49 6081 9419-0	+49 6081 941973-0
Street	Adam-Hall-Str. 1	Adam-Hall-Str. 1
Postal code / city	61267 Neu-Anspach	61267 Neu-Anspach
Website	*www.adamhall.com*	*www.adamhall.com*

2.3 LINK TO THE DOWNLOAD CENTRE

You can download some information, such as CAD data or technical data, from the Download Centre. Scan the QR code or click the link to download this information:

2.4 VISUALISATION CONVENTIONS IN THIS USER MANUAL

In this manual we use graphical symbols and icons in certain contexts. Find below a table with explanations and use cases of the graphical symbols and icons.

Icon / Symbol	Designation	Context	Explanation / Example
✓	**Prerequisite**	Tasks	Used in task topics to indicate a prerequisite that must be met before beginning the task.
⇨	**Result / Intermediate Result**	Tasks	Used in task topics to indicate a result or intermediate result of an action step.
1 Step **a)** Substep	**1 Action Step** **a) Substep**	Tasks	Used in task topics to indicate action steps and substeps.
1	**Callout**	Graphics; tasks	Text-image reference or labeling of certain functions on the device
(...)	**Value range indicator**	Technical data; paragraphs; lists	Indicates the range of a value, such as "Compressor ratio: **1:1...20:1**". Mostly used in tables or callouts.
*	**Asterisk**	Paragraphs; tables	Indicates additional information in a footnote.
The **LIM** LED lights up	**General User Interface element**	Paragraphs; tasks; tables; lists	The words presented in this way represent graphic user interface elements on the device.
PAGE button	**Key / Button**	Paragraphs; tasks; tables; lists	The words presented in this way represent user interface controls on the device.
`<name>`	**User input**	Paragraphs; tasks; tables; lists	The words presented in this way represent required user inputs.
https://adamhall.com	**Weblink**	Paragraphs; tables; lists	External link to a website

3 PRODUCT COMPLIANCE

3.1 MANUFACTURER'S DECLARATION

Adam Hall offers a voluntary, EU-wide manufacturer's guarantee of 5 years. The statutory warranty period is not affected by this voluntary guarantee.
Visit the Adam Hall Service Portal to access the **Download Centre**:
https://portal.adamhall.com/
Under the **Service & Regulations** section, you find our current detailed manufacturer's declarations, warranty conditions, and limitation of liability.
To request warranty for a product, please contact:
Adam Hall GmbH, Adam-Hall-Str. 1, 61267 Neu-Anspach
customerservice@adamhall.com
0049 (0)6081 / 9419-1000

3.2 DECLARATION OF CONFORMITY

EU DECLARATION OF CONFORMITY

Adam Hall GmbH hereby confirms that this product meets the following guidelines (where applicable):

- Low-Voltage Directive (2014/35/EU)
- EMC Directive (2014/30/EU)
- RoHS (2011/65/EU)
- RED (2014/53/EU)

Declarations of conformity for products subject to the LVD, EMC, RoHS Directive can be requested from info@adamhall.com. Declarations of conformity for products subject to RED can be downloaded from *http://www.adamhall.com/compliance*.

Hereby, Adam Hall Ltd. declares that this product meets the following guidelines (where applicable)

- Electrical Equipment (Safety) Regulations 2016
- Electromagnetic Compatibility Regulations 2016 (SI 2016/1091)
- The Restriction of the Use of Certain Hazardous Substances in Electrical and Electronic Equipment Regulation 2012 (SI 2012/3032)
- Radio Equipment Regulations 2017 (SI 2016/2015)

Products that are subject to Electrical Equipment(Safety)Regulation 2016, EMC Regulation 2016 or RoHS Regulation can be requested at info@adamhall.com. Products that are subject to the Radio Equipments Regulations 2017 (SI2017/1206) can be downloaded at *http://www.adamhall.com/compliance*.

FCC STATEMENT

This device complies with part 15 of the FCC Rules. Operation is subject to the following two conditions:

1. This device may not cause harmful interference.
2. This device must accept any interference received, including interference that may cause undesired operation.

This equipment has been tested and found to comply with the limits for a Class B digital device, pursuant to part 15 of the FCC Rules. These limits are designed to provide reasonable protection against harmful interference in a residential installation. This equip-

ment generates, uses and can radiate radio frequency energy and, if not installed and used in accordance with the instructions, may cause harmful interference to radio communications. However, there is no guarantee that interference will not occur in a particular installation. If this equipment does cause harmful interference to radio or television reception, which can be determined by turning the equipment off and on, the user is encouraged to try to correct the interference by one or more of the following measures:

- Reorient or relocate the receiving antenna.
- Increase the separation between the equipment and receiver.
- Connect the equipment into an outlet on a circuit different from that to which the receiver is connected to.
- Consult the dealer or an experienced radio/TV technician for help.

ISED STATEMENT

The digital apparatus complies with Canadian CAN ICES-003 (B) / NMB-003 (B).

4 SAFETY INSTRUCTIONS

4.1 INTENDED USE

The **ORBIT 11** is intended for precise audio monitoring in professional and semi-professional studio environments.
This product has been developed for the professional use in the field of event technology, studio, TV, and broadcast.
This product is intended for fixed installation and not for mobile application.
This product is intended for indoor use only.
This product is not suitable for domestic use.
Do not use the product outside the operating conditions as stated in the user manual under Technical Data. Liability for damage and third-party damage to persons and property due to inappropriate use is excluded.
This product is not suitable for children and persons with limited physical, sensory, or mental capabilities or lack of experience and knowledge.

4.2 EXPLANATION OF SAFETY AND WARNING SYMBOLS

Find the following safety and warning symbols on the device, the user manual, or the packaging:


This symbol indicates that you must read the complete user manual before using the product.


This symbol indicates a general hazardous situation.


This symbol indicates hazards that can cause electric shock.


This symbol indicates high sound pressure levels.


This symbol indicates that the product is for indoor use only.


This symbol indicates that the product is not suitable for household use.


This symbol indicates that the product has no serviceable parts. Only authorized personnel is allowed to perform maintenance or service work.


This symbol indicates helpful hints or additional information.

4.3 STRUCTURE OF WARNING MESSAGES

In this user manual, warning messages are structured with a safety symbol, a signal word, a hazard description, and instructions on how to avoid injuries or death.



DANGER

Indicates a hazardous situation which will result in death or serious injury.



WARNING

Indicates a hazardous situation which could result in death or serious injury



CAUTION

Indicates a hazardous situation which could result in minor or moderate injury.



NOTICE

Indicates situations or conditions that could result in damage to property and/or the environment.

4.4 GENERAL SAFETY







- Read this document carefully.
- Keep this document for later reference.
- Follow closely the instructions in this document.
- This document is an integral part of the product. If you sell or pass on the product, you must include this document.
- Only use this product according to its intended use.
- Risk of choking. Keep small parts away from children and individuals with impaired physical, sensory, or mental capabilities.
- Risk of suffocation. Keep plastic bags away from children and individuals with impaired physical, sensory, or mental capabilities.
- Observe all safety instructions and warning messages in this document, on the device, and on the packaging.
- Products are subject to continuous further development. If you find discrepancies between this document and the product labeling, the information on the product always takes priority.
- Do not remove safety instructions or warning messages from the product.
- Do not open the device.
- Do not modify the product.
- If the product shows any sign of damage, do not use it.
- Do not operate the product with removed or missing covers.
- Do not expose the product to direct sunlight.
- If not further specified in the user manual under Technical Data, do not use the product in ambient temperatures that exceed 40 °C / 104 °F or fall below 0 °C / 32 °F

- Do not use the product in tropical climate.
- Do not use the product above 2000 metres of altitude.
- This device is not suitable for use in marine environments, including ships, offshore applications, or areas exposed to salt-laden air, seawater, or corrosive atmospheres. Use in such environments is at the user's own risk. Any damage or malfunction resulting from such use is excluded from the manufacturer's warranty.
- Use only accessories specified by the manufacturer.
- Maintenance and repairs may only be carried out by authorized service personnel.
- Store and transport the product in a dry and safe environment.
- Clean the product on a regular basis. If applicable, see the user manual for maintenance intervals.
- If the device was exposed to strong temperature changes, such as during transport, do not switch it on immediately. Wait until the device has reached ambient temperature.
- High sound pressure levels may cause hearing damage. Avoid prolonged exposure to high sound pressure levels. Wear hearing protection.
- Risk of hearing damage. Plugging or unplugging devices in the signal chain may cause an audio signal peak. Switch on the loudspeaker as the last device in the signal chain.
- Risk of hearing damage. Switching on or off other devices in the signal chain may cause an audio signal peak. Switch on the loudspeaker as the last device in the signal chain.

4.5 ELECTRICAL SAFETY



- This is an electrical device in protection class I. Make sure that the protective conductor is connected to electrical earth. Do not disconnect the protective conductor.
- Do not bypass the mains fuse.
- Use only mains fuses as specified by the manufacturer.
- Do not use kinked or otherwise damaged power cables.
- Only operate the device on compliant, tested and intact mains power outlets.
- Do not use the device in the vicinity of water. Keep the device away from splashing or dripping water.
- Make sure that the voltage and frequency of the mains power match the values specified by the manufacturer.
- Take suitable measures against overvoltage, such as lightning strikes.
- For devices with a power out connector, make sure the total current consumption of all connected devices does not exceed the value specified by the manufacturer.
- This device is not suitable for continuous current.
- Disconnect the device from all poles before maintenance, repair or extend periods of non-use.
- Permanently connected power cables may only be replaced by a qualified service technician.

4.6 THERMAL SAFETY

- Do not install the device near heat sources, such as radiators or ovens.
- Do not block any ventilation openings.
- Unless otherwise stated, keep a minimum clearance of at least 20 centimetres around the device.
- Unless otherwise stated, keep flammable materials, such as paper or wood, at least 50 centimetres away from the device

4.7 DEVICE SAFETY



- Do not switch the device on and off in quick succession, because this will shorten the device lifetime.
- Loudspeakers generate a magnetic field, even when they are not in use. Devices, such as hard disk drives or cheque cards may be affected by the loudspeaker's magnetic field. Do not set up or transport these devices near the loudspeaker.

5 PRODUCT DESCRIPTION

5.1 PRODUCT OVERVIEW

The **ORBIT 11** is an active coaxial 3-way studio monitor.

FEATURES:

- Coaxial true point source (6.5" midrange woofer + 1" tweeter)
- Impulse-compensated dual 8" woofers
- Frequency range: 28 Hz…28 kHz (-3 dB)
- 120° x 120° constant directivity waveguide
- Cardioid design for consistent directivity down to 250 Hz
- Speaker placement presets
- 3-way design with linear-phase FIR filter
- 1000 W Class-D amplifier for high dynamic range
- High-resolution 96 kHz / 24-bit DAC
- Advanced internal DSP processing at 96 kHz
- Analog and AES3 digital inputs
- Robust, acoustically optimised die-cast aluminium housing
- Available in black or white

5.2 OPTIONAL ACCESSORIES

Find various accessories for your product in the Adam Hall Shop:
https://www.adamhall.com/shop

Accessory	Article Number
SP 3102 TM Flexible Studio Monitor Stand with Table Clamp	GSP3102TM
SP 3102 Studio Monitor Speaker Stand	GSP3102
SP 3202 Studio Monitor Speaker Stand	GSP3202
SP 3202 CS B Studio Monitor Speaker Stand with square steel base	GSP3202CSB
SP WMBS 20 B Tilt-and-Swivel Wall Mount for Speakers up to 20 kg, Black	GSPWMBS20B
SP WMBS 20 W Tilt-and-Swivel Wall Mount for Speakers up to 20 kg, White	GSPWMBS20W
SP 3202 VT VARI®-TILT Studio Monitor Speaker Stand	GSP3202VT

5.3 TECHNICAL DATA

GENERAL

Parameter	Value
Article number	PORBIT11(W)
Product type	Coaxial studio monitor
Peak output power	1,000 W
RMS output power	400 W
Amp class	Class D
Max. SPL peak	116 dB
Frequency response (-3 dB, rel. Avg)	28 Hz ... 28 kHz
Crossover frequency	250 Hz / 1800 Hz
Total Harmonic Distortion (f > 100 Hz; 84 dB @ 1 m):	0.4 %
Beam angle horizontal	120°
Beam angle vertical	120°
Number of inputs	2
Input connector types	XLR 3-pole female
Number of outputs	1
Output connector types	XLR 3-pole male
Protective circuits	Peak, RMS, Therm Limiter

INPUTS

Parameter	Value
Number of line inputs	1
Line input connectors	XLR 3-pole female
AES3 inputs	1
AES3 input connectors	XLR 3-pole female

LINE INPUTS

Parameter	Value
Nom. sensitivity (<1 % THD, 1 kHz)	0 dBu
Nom. input clipping	22 dBu
Input Impedance	10 kΩ

OUTPUTS

Parameter	Value
AES3 outputs	1
Output signal type	AES3/EBU thru
AES3 output connectors	XLR 3-pole male

SIGNAL PROCESSING

Parameter	Value
DSP model	ADAU1463
AD/DA converter bit depth	24 Bit
AD/DA converter sampling frequency	96 kHz
Signal-to-noise ratio (SNR)	103 dB
Max. THD+N (1 kHz, +4 dBu, unity, unweighted)	0.01 %
Max. THD+N (30 kHz, +4 dBu, unity, unweighted)	0.02 %
System latency	4.1 ms
EQ band **LOW**	Low Shelf, 100 Hz, Q 0.7
EQ band **MID**	Peak, 1200 Hz, Q 0.5
EQ band **HI**	High Shelf, 2700 Hz, Q 1.4
Filter **DESK**	Peak, 380 Hz, Q 1.5, -2 dB
Filter **REAR WALL** - Small Distance	Low Shelf, 150 Hz, Q 0.9, -6 dB
Filter **REAR WALL** - Larger Distance	Low Shelf, 100 Hz, Q 0.9, -3 dB

BASS DRIVER

Parameter	Value
Number of bass drivers	2
Woofer size (inch)	8"
Woofer voice coil (inch)	1.5"
Woofer outside diameter	200 mm
Woofer magnet	Ferrit
Woofer brand	Custom made

MIDRANGE DRIVER

Parameter	Value
Number of midrange drivers	1
Midrange size (inch)	6.5"
Midrange voice coil (inch)	2"
Midrange outside diameter	169 mm
Midrange magnet	Ferrit
Midrange brand	Custom made

TWEETER

Parameter	Value
Number of tweeters	1
Tweeter design	Titanium Dome Tweeter
Tweeter size (inch)	1"
Tweeter voice coil (inch)	1"
Tweeter outlet diameter	1"
Tweeter magnet	Neodymium
Tweeter brand	Custom made

MAINS OPERATION

Parameter	Value
Operation voltage	AC 100 V...240 V / 50 Hz...60 Hz
Power supply	SMPS

HOUSING

Parameter	Value
Housing colour PORBIT11	Black
Housing colour PORBIT11W	White
Housing design	Closed (LF) + Cardioide baffle (MF/HF)
Housing material	Aluminium die-cast
Housing material thickness	5 mm ... 16 mm
Housing protective coating	Powder coating
Cooling	passive

AMBIENT CONDITIONS

Parameter	Value
Protection class	IP20
Ambient temperature (operating)	0 °C ... 40 °C
Maximum air humidity (non-condensing)	80 %

DIMENSIONS AND WEIGHT

Parameter	Value
Dimensions (W x H x D)	216 mm x 293 mm x 294 mm
Weight	14 kg

5.4 USER INTERFACE

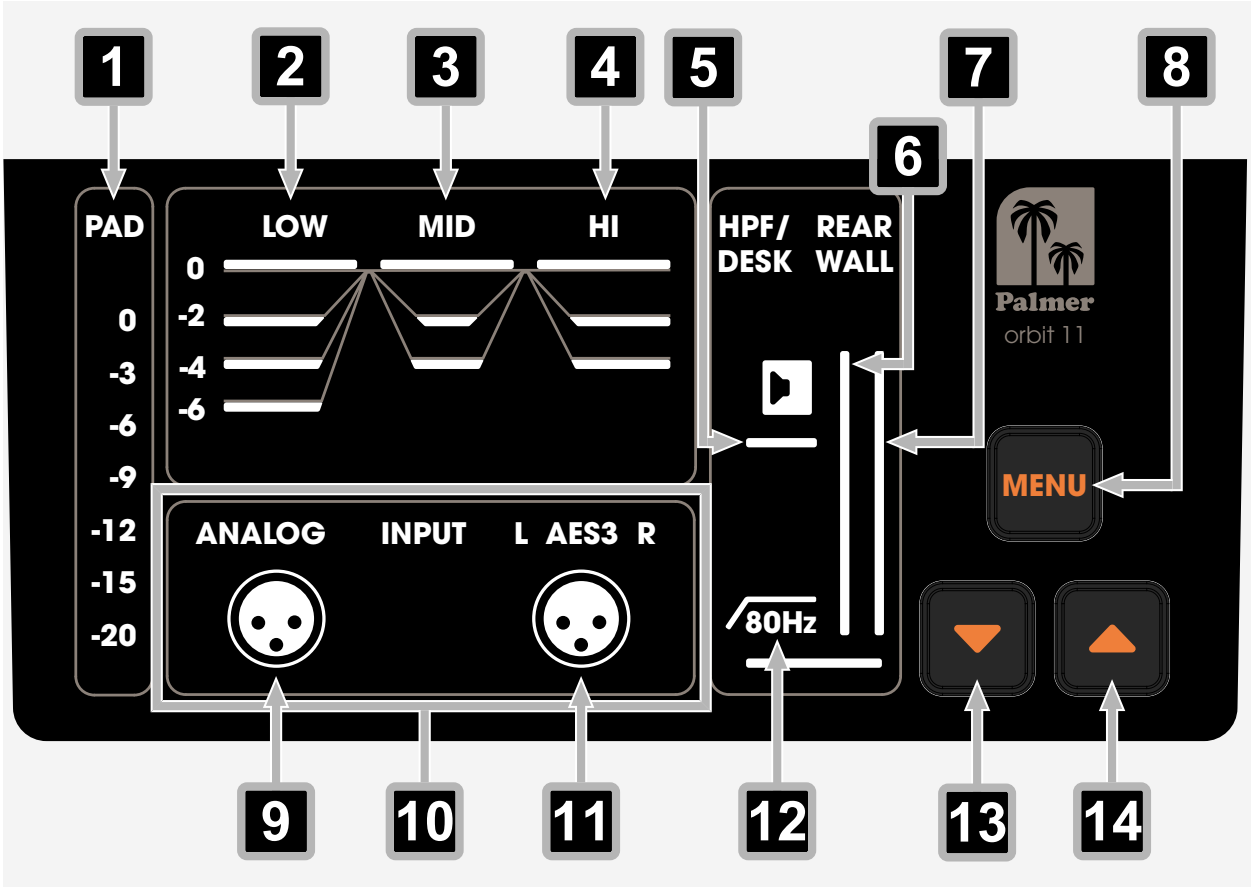

1. **PAD** - Indicates the input signal attenuation in dB (**0**, **-3**, **-6**, **-9**, **-12**, **-15**, **-20**).
2. **Equaliser LOW** - Indicates the **LOW** band of the equaliser in dB (**0**, **-2**, **-4**, **-6**).
3. **Equaliser MID** - Indicates the **MID** band of the equaliser in dB (**0**, **-2**, **-4**).
4. **Equaliser HI** - Indicates the **HI** band of the equaliser in dB (**0**, **-2**, **-4**).
5. **Adaptation Filter: DESK** - Indicates wether the **DESK** filter is active.
6. **Adaptation Filter: REAR WALL Small Distance (0 cm ... 30 cm)** - Indicates whether the adaptation filter **REAR WALL** is set for small distances to the rear wall.
7. **Adaptation Filter: REAR WALL Larger Distance (31 cm ... 50 cm)** - Indicates whether the adaptation filter **REAR WALL** is set for larger distances to the rear wall.
8. **MENU** - Skips through the control panel sections (**PAD**, **LOW**, **MID**, **HI**, **HPF/ DESK**, **REAR WALL**, **INPUT**). After reaching the last section, the selection jumps back to the first element.
9. **INPUT: ANALOG** - Indicates wether the analogue input is active.
10. **INPUT** Section - Indicates the active input (**ANALOG**, **AES3 L**, **AES3 R**, **AES3 LR**).

11 **INPUT: AES3** - Indicates wether the AES3 input is active.

12 **Adaptation Filter: HPF** - Indicates wether the highpass filter (80 Hz) is active.

13 ▼ - Changes the value downwards in the selected section.

14 ▲ - Changes the value upwards in the selected section.

5.5 FRONT LED

When the **ORBIT 11** is switched on, the front LED **1** can have 2 different states.

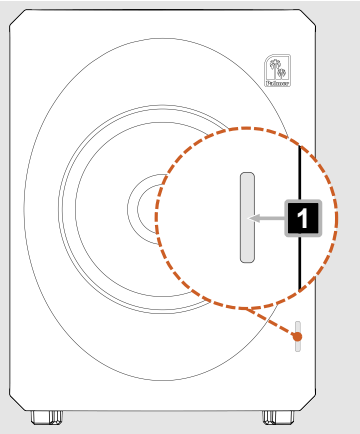

- **Power on:**
  Orange
- **Limit:**
  Red - A brief flash indicates the activity of the peak limiter. A steady light indicates the activity of the RMS limiter.

6 PREPARATION

6.1 SCOPE OF DELIVERY

- Device
- Mains power cable
- Safety Compliance Information
- Quick Start Guide
- Screws and washers for wall mounting (4x M6 x 10 mm - T30)
- Eyebolt for safety fastening (M8)

7 INSTALLATION

NOTICE

Damage to the device

Do not touch the loudspeaker membranes when handling the device.

7.1 ABOUT POSITIONING STUDIO MONITORS

Find below basic information on the positioning of studio monitors.

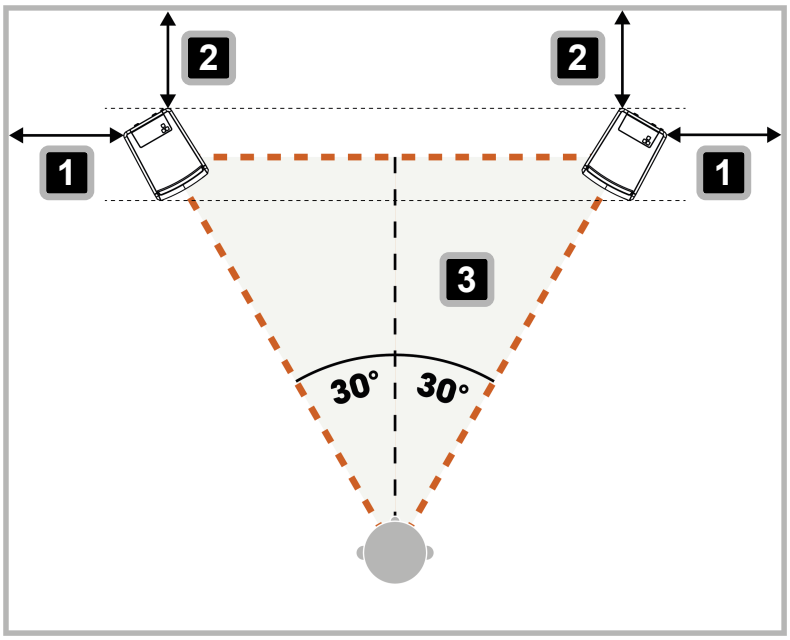

- Place the studio monitors upright.
- Place the studio monitors with distances as symmetrical as possible to the walls at the sides 1 and at the rear 2.
- Place the studio monitors so that the tweeter is approximately at the same height as your ears at the listening position.
- Place the studio monitors so that the listening position and the two studio monitors form an equilateral triangle 3.
- **Avoid placing** the studio monitors in a corner of the room.

7.2 POSITIONING USE CASES

The **ORBIT 11** is designed to create the most neutral listening conditions possible, even in acoustically difficult environments.
Setting the adaptation filters (} 33) of the **ORBIT 11** allows you to partially compensate for less favourable installation conditions.
Find below typical use case examples.

POSITIONING ON A DESK BOARD

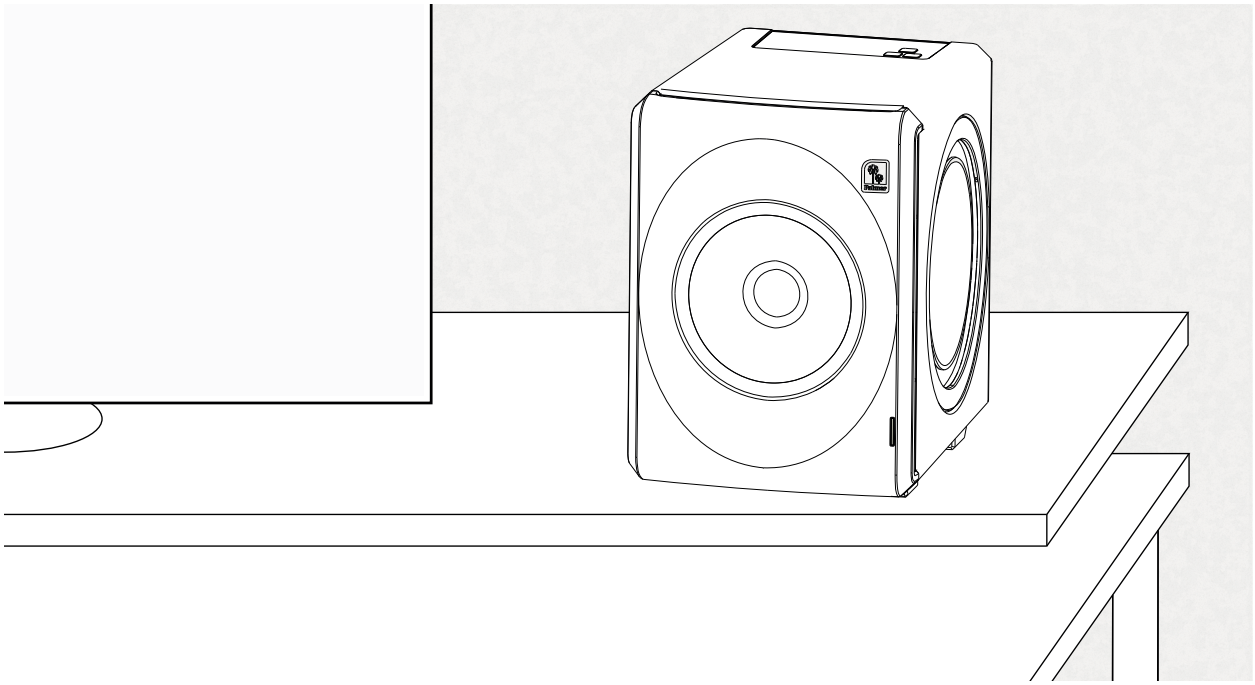

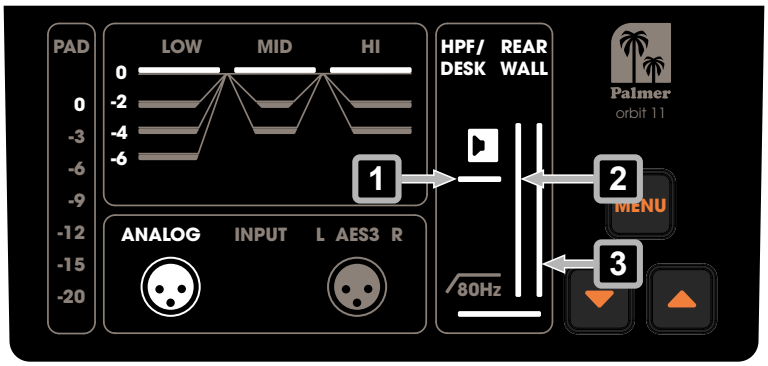

Adaptation filter settings:

1 **DESK**: On

REAR WALL:

2 Small distance to the rear wall
(0 cm … 30 cm)

3 Larger distance to the rear wall
(31 cm … 50 cm)

Off Distance to the rear wall > 50 cm

POSITIONING ON A STAND

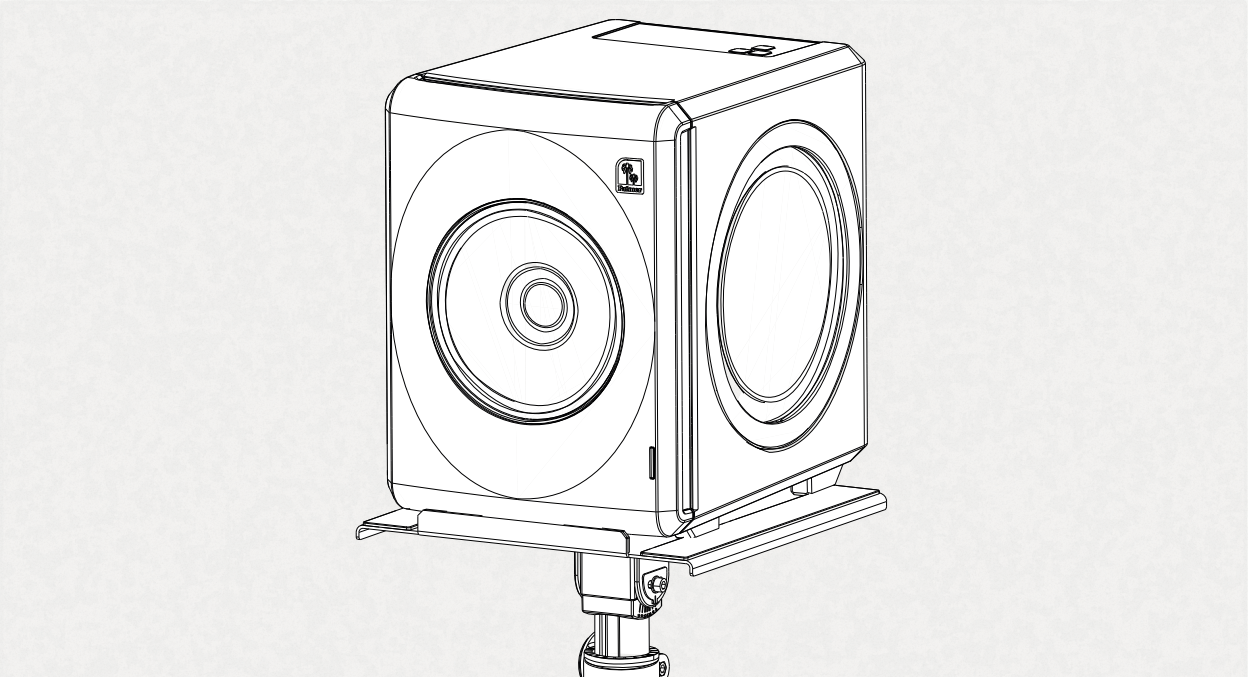

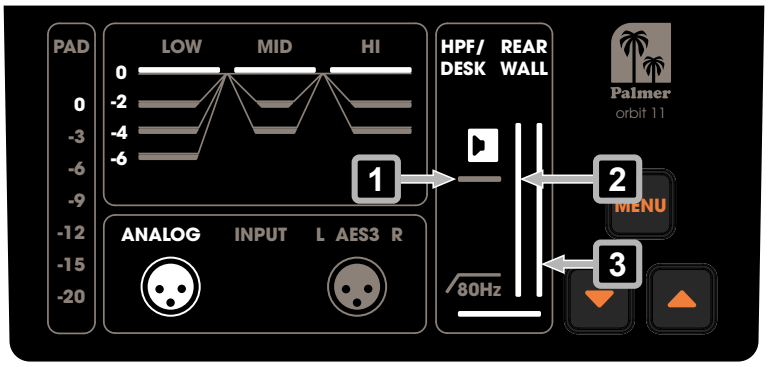

Adaptation filter settings:

1 **DESK**: Off

REAR WALL:

2 Small distance to the rear wall (0 cm … 30 cm)

3 Larger distance to the rear wall (31 cm … 50 cm)

Off Distance to the rear wall > 50 cm

MOUNTING ON A WALL

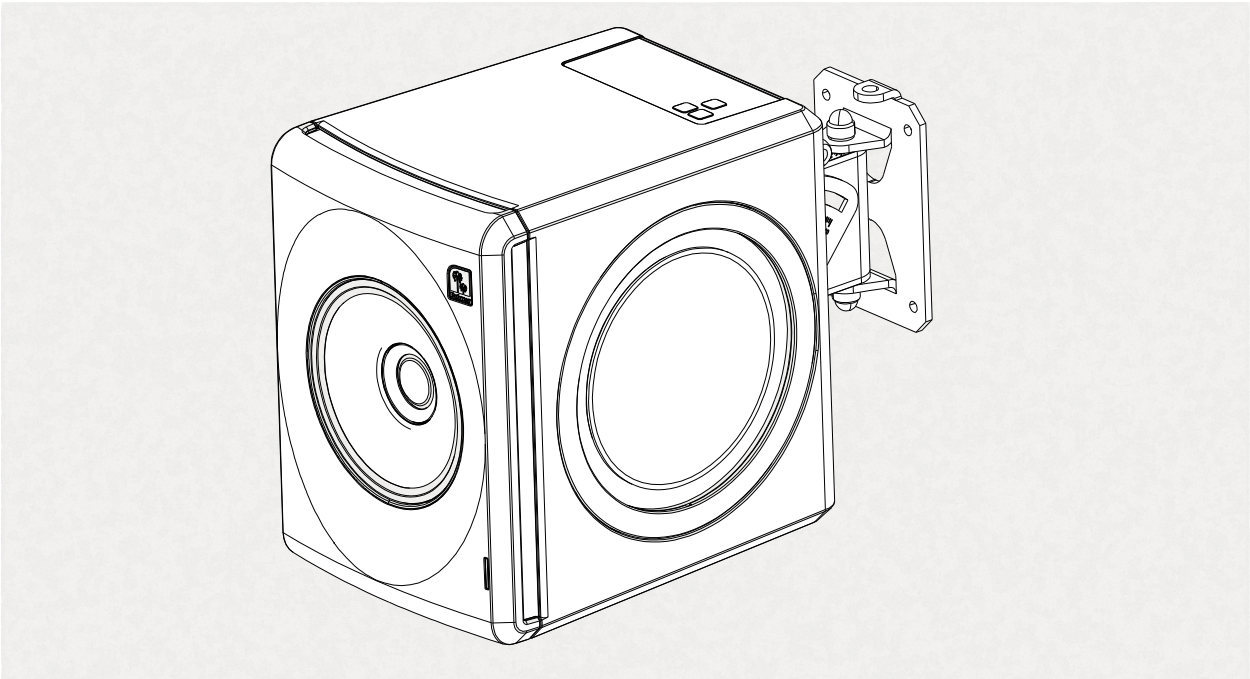

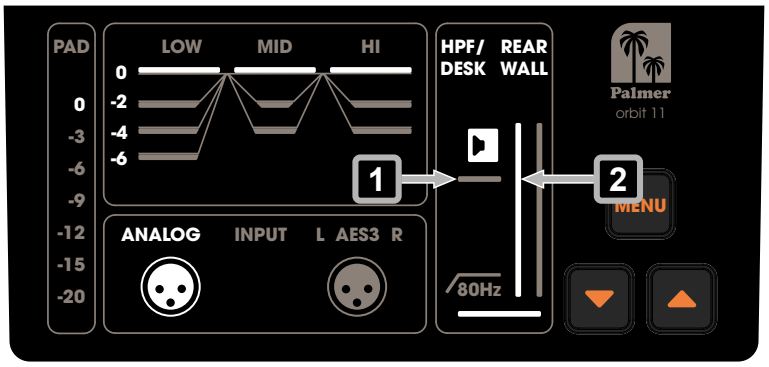

Adaptation filter settings:

1. **DESK**: Off
2. **REAR WALL**: Small distance to the rear wall (0 cm … 30 cm)

7.3 ATTACHING THE EYE BOLT

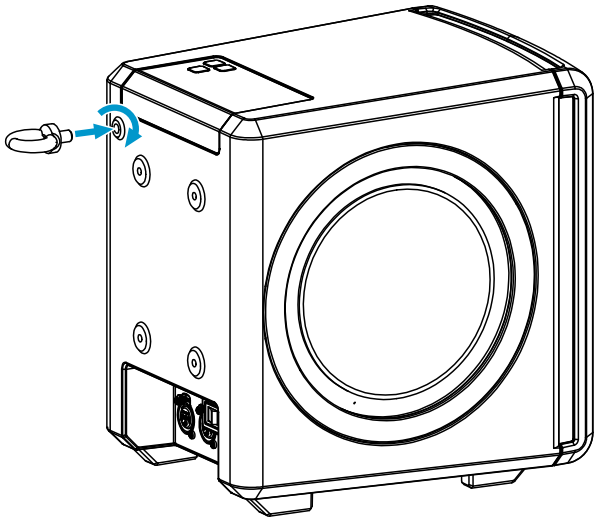

1 Screw in the M8 eye bolt (included in the scope of delivery).

7.4 ATTACHING THE WALL MOUNT

WARNING

Falling object

Risk of serious injury

a. Observe all regional safety regulations concerning overhead loads.
b. Make sure that the device is securely mounted.
c. Make sure that the mounting accessory supports the weight of the device.
d. Before any assembly, check that all mounting bracket components are complete, undamaged and work correctly.

CAUTION

Pinching Hazard

Risk of Injury

a. Be cautious while attaching the brackets. Handle with care to avoid injury.

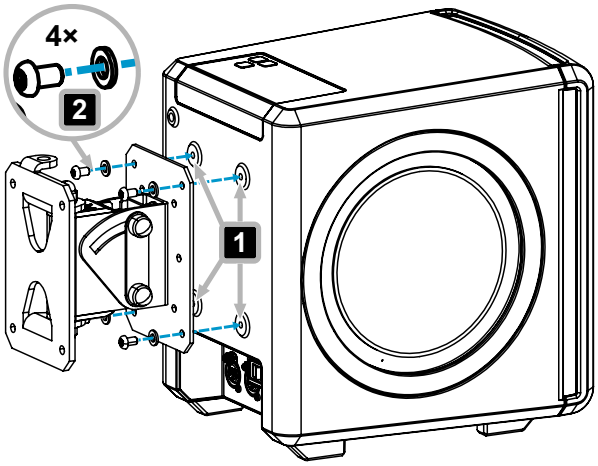

1. Align the wall mount with the 4 threads 1.
2. Screw in the 4 M6 screws with the washers 2 (included in the scope of delivery).

The device feet can optionally be removed if the **ORBIT 11** is mounted on the wall.

See also:
Removing the Device Feet (} 27)

7.4.1 REMOVING THE DEVICE FEET

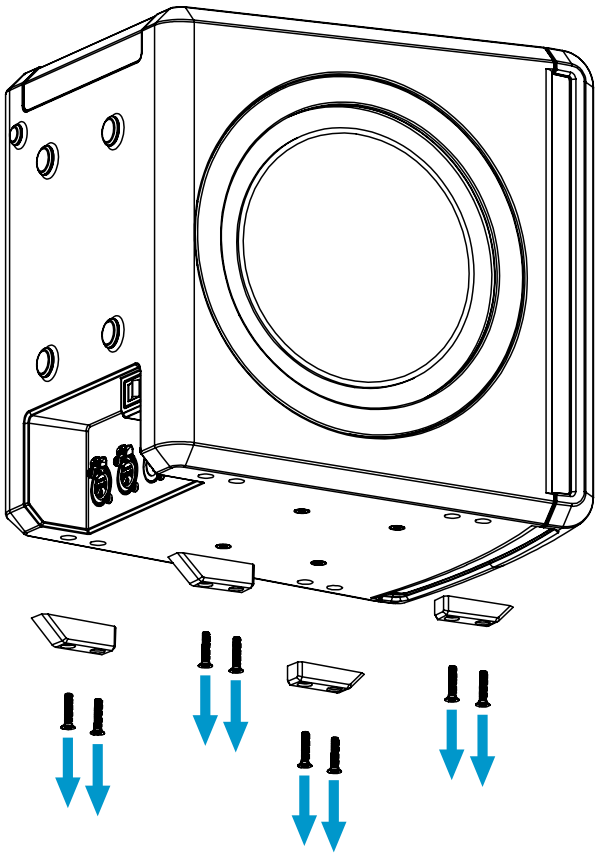

✓ Torx screwdriver T20 / T20 Torx bit

1 Remove the 2 screws from each of the 4 feet.

ⓘ Keep the device feet in a safe place.

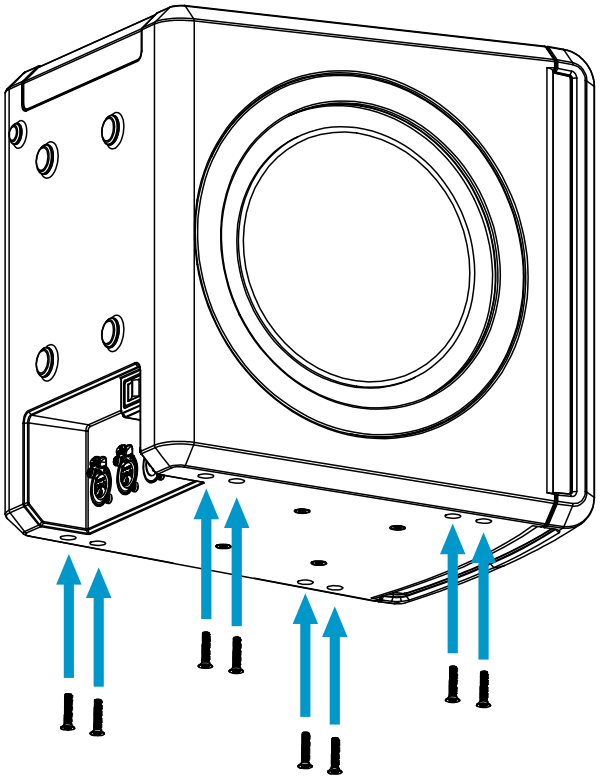

2 Screw the 8 screws back in.

8 OPERATION

8.1 POWER SUPPLY

8.1.1 POWER CONNECTION

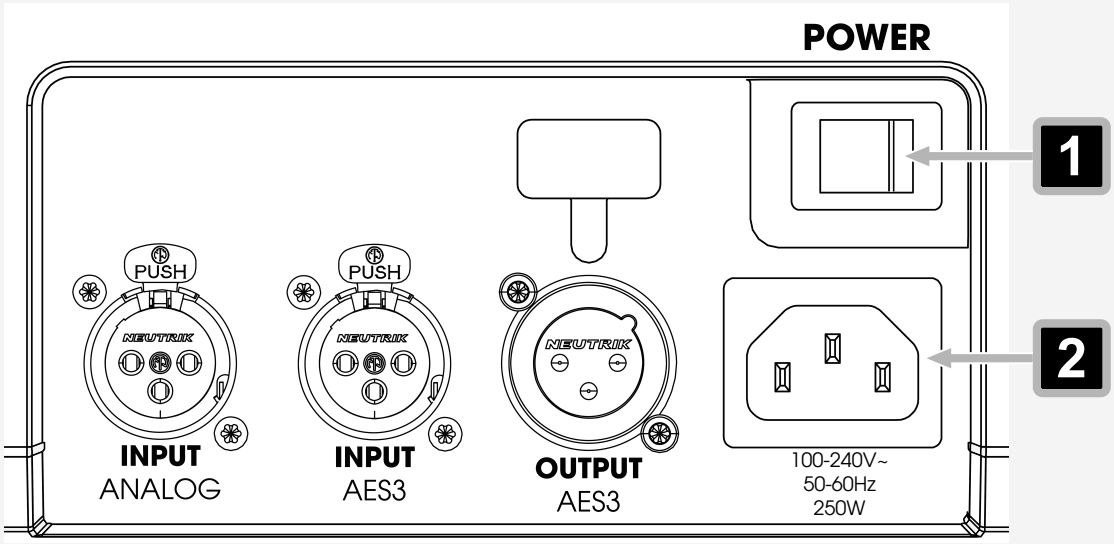

1 **POWER** - On / Off switch

2 **C14 Socket** - Device power socket

8.1.2 CONNECTING A MAINS POWER CABLE

WARNING

Mains voltage

Risk of electric shock

a. Do not use kinked or damaged mains power cables.

NOTICE

Damage to the device

a. Make sure the mains power voltage matches the device´s voltage.
b. Use the supplied mains power cable.
c. Do not plug or unplug the device under load.
d. Power off the device before connecting or disconnecting the mains power cable.

1 Plug the C13 connector of the mains power cable into the C14 socket on the device.

2 Plug the mains connector of the mains power cable into the mains power socket.

8.1.3 TURNING THE DEVICE ON OR OFF

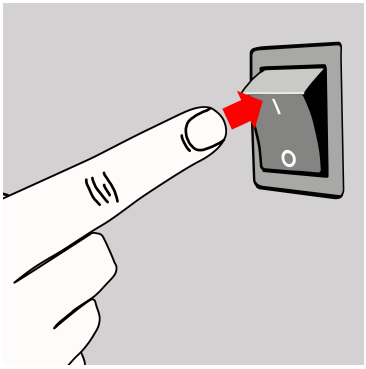

1 Flip the switch from the ◎ to the ▯ position.
   ⇨ After a few seconds, the device is operational.
2 Flip the switch from the ▯ to the ◎ position.
   ⇨ The device turns off.

8.2 NAVIGATING THE DEVICE

8.2.1 USING THE MENU BUTTON

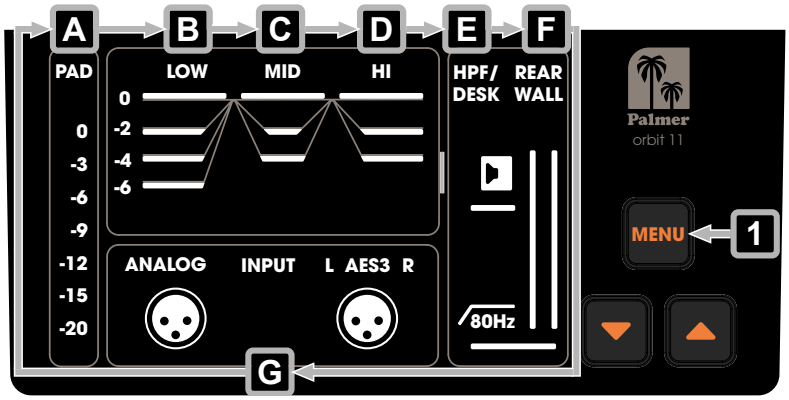

The menu sections follow a circular structure. When you have selected the last menu section G and press **MENU** 1, you reach the first menu section A.

8.2.2 USING THE ARROW BUTTONS

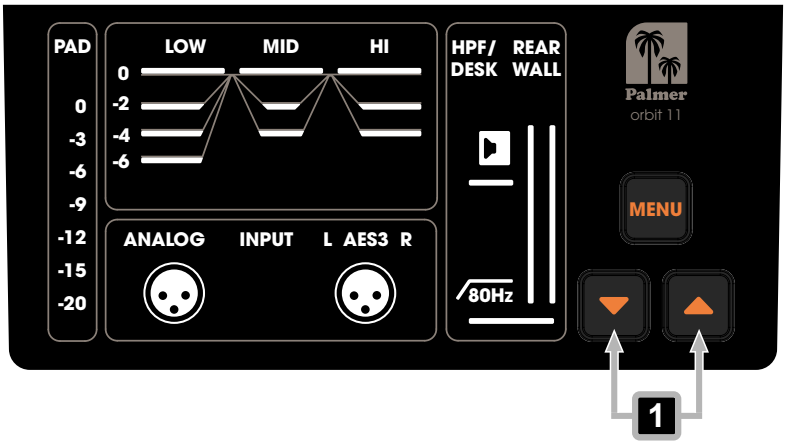

Set values within each menu section using the arrow buttons 1.

1 Press ▲ to increase the value or ▼ to decrease it.

8.3 AUDIO CONNECTIONS

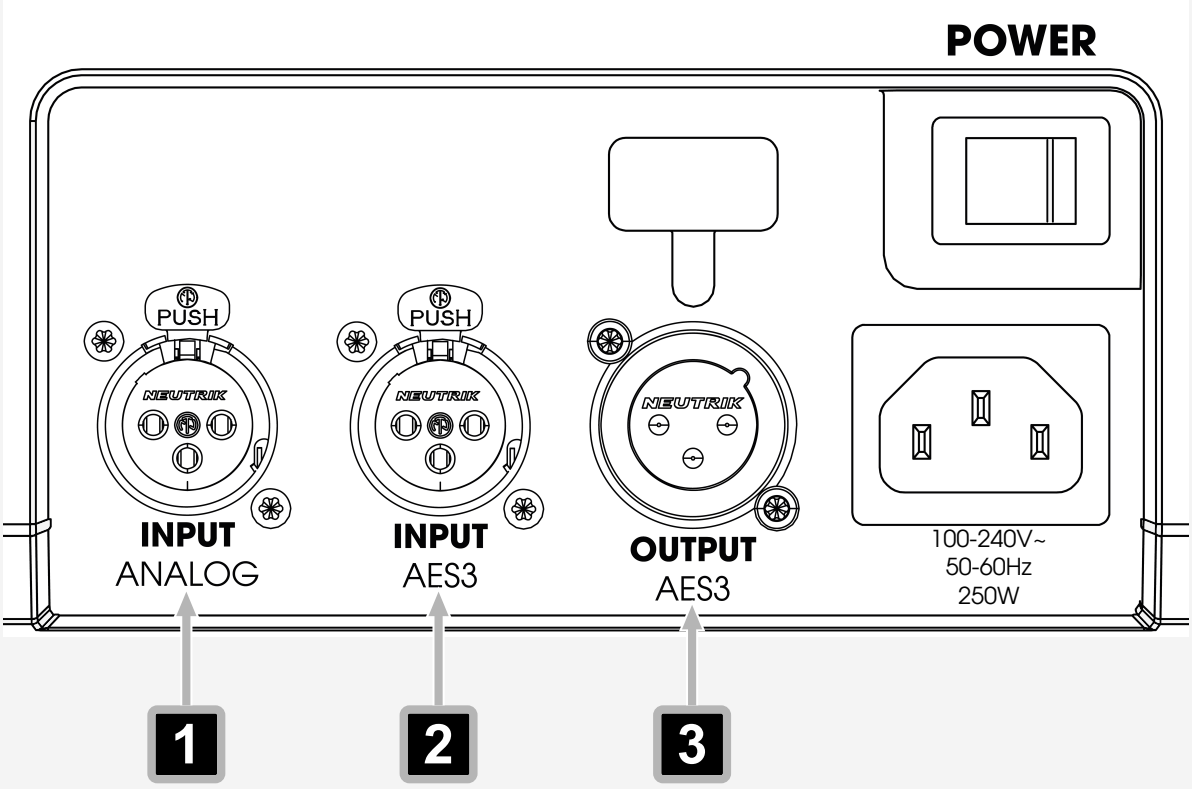

1 **INPUT ANALOG** - Line input socket (balanced 3-pin XLR)

2 **INPUT AES3** - AES3 input socket (3-pin XLR for AES3 cable)

3 **OUTPUT AES3** - AES3 output socket (3-pin XLR for AES3 cable)

8.4 INPUT CONNECTIONS

8.4.1 CONNECTING AN INPUT SOURCE TO THE ANALOG INPUT



CAUTION

High Sound Pressure Level

Risk of hearing damage

a. Switch off the device before connecting an input source.

b. Make sure that the input source volume is turned all the way down before connecting it.



NOTICE

High Sound Pressure Level

Damage to the loudspeaker

a. Connect line level devices, such as mixing consoles, to the line input only.

✓ 3-pin XLR cable

1. Turn down the input source volume.
2. Switch off the device.
3. Connect the line input source to the **ANALOG INPUT** socket.
4. Switch on the device.
5. Turn up the input source volume.

8.4.2 CONNECTING AN INPUT SOURCE TO THE AES3 INPUT



CAUTION

High Sound Pressure Level

Risk of hearing damage

a. Switch off the device before connecting an input source.

b. Make sure that the input source volume is turned all the way down before connecting it.



NOTICE

High Sound Pressure Level

Damage to the loudspeaker

a. Connect AES3 devices to the AES3 input only.



The AES3 input supports sample rates up to 96 kHz.

✓ 3-pin XLR cable that complies with the AES3 standard.

1. Turn down the input source volume.
2. Switch off the device.
3. Connect the AES3 input source to the **AES3 INPUT** socket.
4. Switch on the device.
5. Turn up the input source volume.

8.5 AUDIO PLAYBACK

8.5.1 SETTING THE PAD



1 Press **MENU** until **PAD** 1 lights up.
2 Press ▼ to increase 2 or ▲ to decrease 3 the attenuation value.

8.5.2 SETTING THE EQUALISER BANDS

The **ORBIT 11** has three adjustable equaliser bands (**LOW**, **MID**, **HI**). Find below the instruction for the **LOW** band as an example.

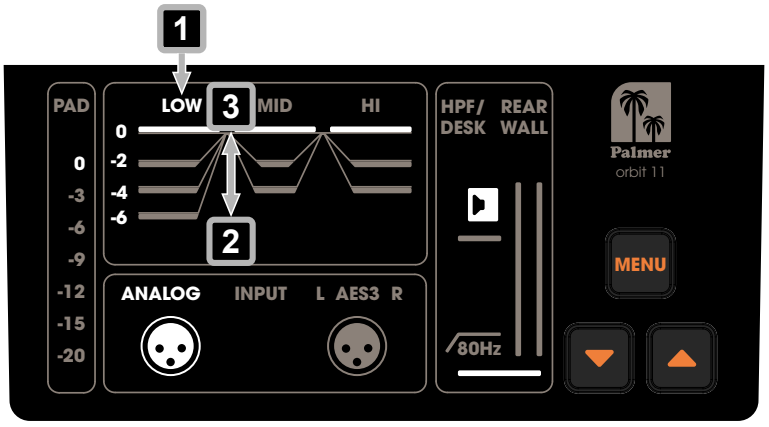

1 Press **MENU** until **LOW** 1 lights up.
2 Press ▼ to increase 2 or ▲ to decrease 3 the cut for the equaliser band.

8.5.3 SETTING THE ADAPTATION FILTERS

8.5.3.1 SETTING THE ADAPTATION FILTER DESK

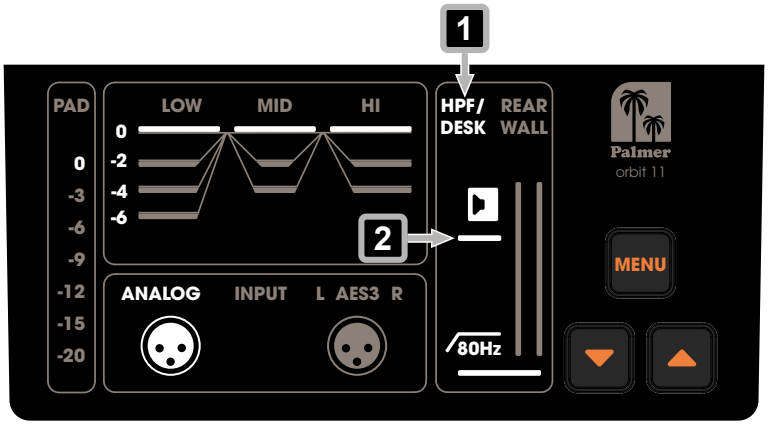

1 Press **MENU** until **HPF/ DESK** 1 lights up.

2 Press ▼ or ▲ until the desk symbol line 2 lights up.

8.5.3.2 SETTING THE ADAPTATION FILTER REAR WALL

1 Press **MENU** until **REAR WALL** 1 lights up.

a) Activating the adaptation filter for small distances to a rear wall:

Press ▲ or ▼ until the left wall symbol line 2 lights up.

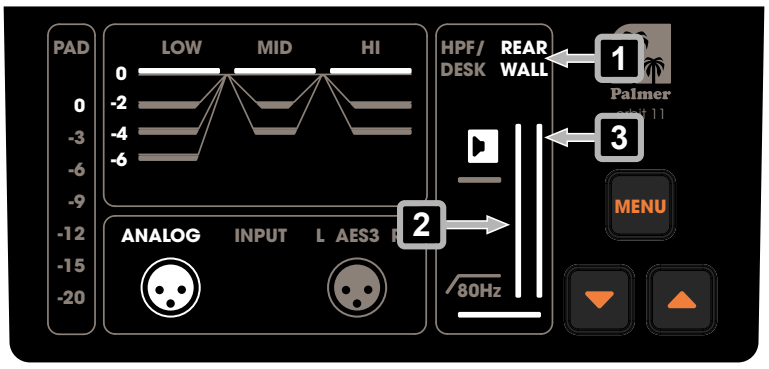

b) Activating the adaptation filter for larger distances to a rear wall:

Press ▲ or ▼ until the right wall symbol line 3 lights up.

c) Deactivating the adaptation filter:

Press ▲ or ▼ until both wall symbol lines do not light up.

8.5.3.3 ACTIVATING THE HIGH-PASS FILTER (HPF)

Activate the high-pass filter (**HPF**) as required to attenuate low-frequency room modes, minimize unwanted acoustic excitation, or when using an external subwoofer.

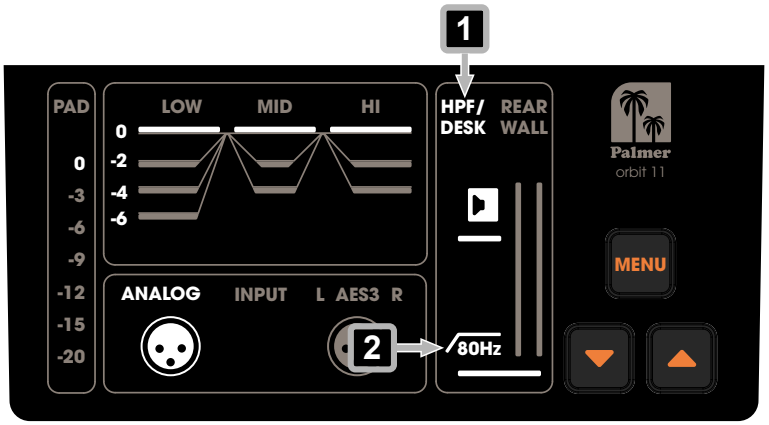

1 Press **MENU** until **HPF/ DESK** 1 lights up.

2 Press ▼ or ▲ until the high-pass filter symbol 2 lights up.

8.5.4 SETTING THE INPUT SOURCE

1 Press **MENU** until **INPUT** 1 lights up.

a) Analogue input:

Press ▼ or ▲ until **ANALOG** 2 lights up.

b) Left channel of the AES3 input:

Press ▼ or ▲ until **L** 3 and **AES3** 4 light up.

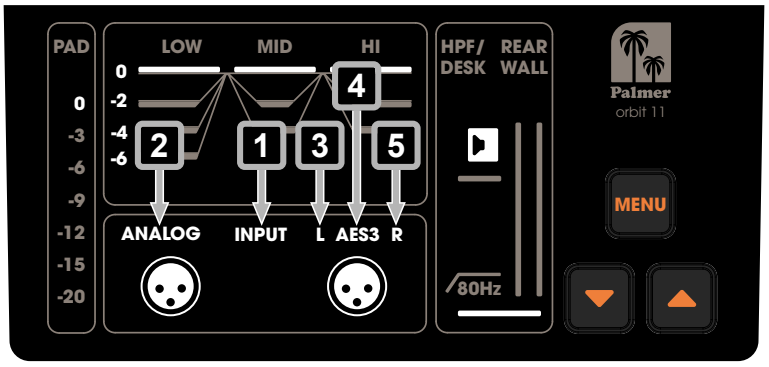

c) Right channel of the AES3 input:

Press ▼ or ▲ until **R** 5 and **AES3** 4 light up.

d) Both channels of the AES3 input (Mono summing):

Press ▼ or ▲ until **L** 3, **AES3** 4, and **R** 5 light up.

8.6 OUTPUT CONNECTIONS

8.6.1 CONNECTING A SECOND ORBIT 11 VIA AES3 OUTPUT

The **AES3 OUTPUT** passes on the signal connected to the **AES3 INPUT**.

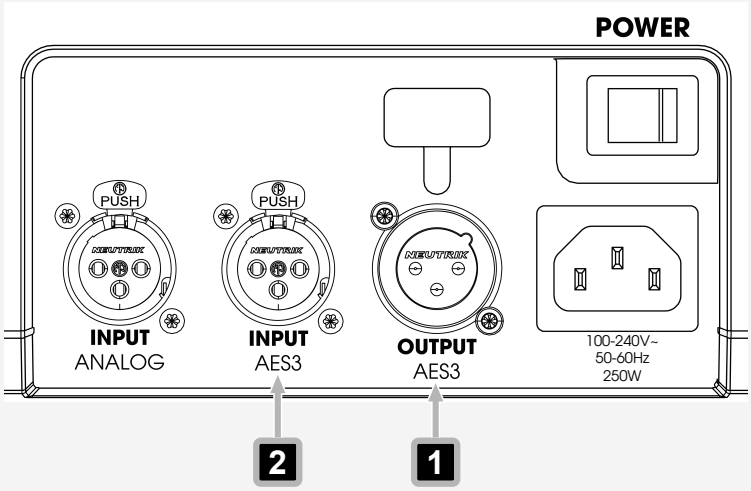

1 Connect the **AES3 OUTPUT** 1 to the **AES3 INPUT** 2 of a second **ORBIT 11** using a 3-pin AES3 compatible XLR cable.

⇨ Both **ORBIT 11** receive the same digital AES3 signal.

9 MAINTENANCE

9.1 PRODUCT MAINTENANCE



CAUTION

Mains Voltage

Risk of electric shock

a. Before you perform maintenance work on the device, disconnect the device from all poles.



NOTICE

Damage to the device and void of warranty

a. Do not use cleaning agents, disinfectants, alcohol, or agents with abrasive effect for cleaning.

Carry out the maintenance measures listed below on a regular basis. The frequency of cleaning depends on the environment in which you use the product. Damp or dirty environments may cause increased soiling and wear.

VISUAL INSPECTION

Check the following points before operating the device.

- ⚠ **WARNING! Risk of electric shock.** Check mains power cables for damage or material fatigue.
- Check all air inlets and outlets for damage, dust, or dirt deposits.
- Check all outside screws and covers for corrosion, damage or excessive wear.
- Check all connectors and rubber sealing caps for damage, dust, or dirt deposits.
- ⚠ **WARNING! Risk of falling objects.** Check that all screws, fasteners, and rigging points are securely tightened.

CLEANING

- Clean the surface with a clean and damp lint-free cotton cloth. Wipe off all excess moisture.
- **NOTICE! Do not use compressed air.** Clean any air inlets and outlets of dust and dirt deposits with a clean and damp lint-free cotton cloth.
- Clean all plug contacts from dust and dirt with a dry lint-free cotton cloth.

9.2 STORING THE DEVICE

Store the device only in a dry and clean environment. If you are storing the individual components of the device, use special protective covers, bags, and cases. Find such accessories for your product in the Adam Hall Shop (https://www.adamhall.com/shop).

9.3 TROUBLESHOOTING

Problem	Cause	Solution
Analogue input signal distorted	Defective device connected to the input	Test with another device whether the problem persists.
	Cable defective	Test with another cable whether the problem persists.
Main limiter is active (Front LED red)	Input volume is too loud	Reduce the volume of the input device.
		Increase the attenuation value of the **PAD**.
No signal via the **AES3 INPUT**	Cable unsuitable for AES3 transmission	Use a cable that complies with the AES3 standard.
	Cable defective	Test with another AES3 cable whether the problem persists.
	Sample rate of AES3 input source too high	The AES3 input supports sample rates up to 96 kHz.

10 REPAIR



CAUTION

Do not repair the device.

a. Repairs may only be carried out by specialist personnel authorised by the manufacturer.

b. If your device is damaged or requires service, contact the Adam Hall Customer Service.

11 DISPOSAL

11.1 PACKAGING DISPOSAL



1. You can feed the packaging into the reusable material cycle using the usual disposal methods.
2. Separate the packaging in accordance with the applicable disposal laws and recycling regulations in your country

11.2 DEVICE DISPOSAL



1. This device is subject to the European Directive on Waste Electrical and Electronic Equipment, as amended. WEEE Directive Waste Electrical and Electronic Equipment. Old appliances do not belong in the household waste. The old device must be disposed of via an approved disposal company or a municipal disposal facility. Observe the applicable regulations in your country.
2. Observe all disposal laws applicable in your country.
3. As a private customer, you can obtain information on environmentally friendly disposal options from the seller of the product or the appropriate regional authorities.

INDEX

A

Accessories 14
Adaptation filters 33
AES3 input 31
AES3 output 35
Arrow buttons 29
Attaching
  Eyebolt 25
  Wall mount 26
Audio connections 30

C

Cleaning 36
Connecting
  AES3 Input 31
  AES3 Output 35
  Line Input 31
Customer Service 6

E

Equaliser 32
Eyebolt 25

F

Front LED 19

H

High-pass filter 34

I

Input Connections 31
Input source 34

L

LED 19

M

Mains power cable 28
Menu button 29

N

Navigating 29

O

Optional accessories 14
Output Connections 35
Overview
  Audio connections 30
  Power connection 28
  Product 14
  User interface 18

P

Pad 32
Power supply 28

S

Scope of delivery 20
Settings
  Adaptation filters 33
  Equaliser 32
  High-pass filter 34
  Input source 34
  Pad 32
Storing 36

T

Technical data 15, 16, 17
Troubleshooting 37
Turning on / off 29

W

Wall mount 26

Palmer®
be true to your sound

9007199516431627