USER MANUAL

cameo

LED TECHNOLOGY

PAN & TILT

RGB ALC

IRIS

512 DMX

FROST FILTER

W-DMX™

GOBO WHEEL

RDM

4-SHUTTER FRAMING BLADES

ARTNET COMPATIBLE

ANIMATION WHEEL

sACN COMPATIBLE

FLICKER FREE



OPUS® SP6 FC

SPOT PROFILE MOVING HEAD

CLOSP6FC

en-GB

TABLE OF CONTENTS

1 DOCUMENT VERSION AND REVISIONS 6

2 INTRODUCTION 7

2.1 You Made the Right Choice! 7

2.2 Contacts 7

2.3 Link to the Download Centre 7

2.4 Visualisation Conventions in This User Manual 8

3 PRODUCT COMPLIANCE 9

3.1 Manufacturer's Declaration 9

3.2 Declaration of Conformity 9

4 SAFETY INSTRUCTIONS 11

4.1 Intended Use 11

4.2 Explanation of Safety and Warning Symbols 11

4.3 Structure of Warning Messages 12

4.4 General Safety 12

4.5 Electrical Safety 13

4.6 Physical Safety 14

4.7 Photobiological Safety 14

4.8 Thermal Safety 14

4.9 Wireless Safety 14

4.10 Device Safety 15

5 PRODUCT DESCRIPTION 16

5.1 Product Overview 16

5.2 Optional Accessories 16

5.3 Technical Data 16

5.4 User Interface 18

5.4.1 Front Panel Overview 18

5.4.2 Rear Panel Overview 19

6 GENERAL INFORMATION 20

6.1 About DMX Technology 20

6.1.1 DMX Standard 20

6.1.2 DMX Connection 20

6.1.2.1 Connecting Multiple Fixtures 20

6.1.3 Pin Assignment 20

6.1.4 DMX Terminators 21
6.1.5 DMX Adapters 21
7 PREPARATION 22
7.1 Scope of Delivery 22
7.2 Transport 22
7.2.1 Using the Side Recesses or Base Handles for Transport 22
7.2.2 Unlocking the Tilt Lock 23
7.2.3 Unlocking the Pan Lock 23
7.2.4 Locking the Tilt Lock 24
7.2.5 Locking the Pan Lock 24
8 INSTALLATION 25
8.1 Omega Bracket Mounting Mechanism Overview 25
8.2 Attaching Omega Brackets 25
8.3 Replacing the Front Lens with the Fresnel Lens 27
9 OPERATION 28
9.1 Power Supply 28
9.1.1 Connecting a Mains Power Cable 28
9.1.2 Disconnecting a Mains Power Cable 28
9.2 Device Navigation 29
9.2.1 Using the Control Panel 29
9.2.2 Activating / Deactivating Autolock 29
9.2.3 Using the Battery-powered Display 30
9.3 Device Configuration 30
9.3.1 Setting the DMX Start Address 30
9.3.2 Setting the DMX Mode 30
9.3.3 Setting the Network 31
9.3.4 Setting the IP Address 31
9.3.5 Setting the Subnet Mask 31
9.3.6 Setting the Stand-Alone Mode 32
9.3.7 Setting the Slave Mode 32
9.3.8 Extended Slave Mode 33
9.3.8.1 Setup for a Running Light Effect 33
9.3.8.2 Setup for a Running Light Effect with Master and First Slave in Sync 33
9.3.9 Pairing a Wireless DMX Receiver with a Transmitter 33
9.3.10 About Linking Key 33
9.3.11 Pairing a Wireless DMX Receiver with a Transmitter via Linking Key 34

9.3.12 Unlinking a Wireless DMX Receiver from a Transmitter 34
9.3.13 Configuring Quicklight 34
9.4 Main Screen Overview 35
9.5 Submenus 36
9.5.1 About the Submenus 36
9.5.2 Control Menu 36
9.5.2.1 Network Art-Net Submenu Layers 36
9.5.2.2 Network sACN Submenu Layers 37
9.5.2.3 Stand-Alone Submenu Layers 37
9.5.3 Settings Menu 38
9.5.3.1 Wireless Submenu Layers 38
9.5.3.2 Dimmer Submenu Layers 39
9.5.3.3 XColour Submenu Layers 39
9.5.3.4 Fan Submenu Layers 40
9.5.3.5 Movement Submenu Layers 40
9.5.3.6 Wheels Submenu Layers 41
9.5.3.7 Signal Fail Submenu Layers 41
9.5.3.8 Display Submenu Layers 42
9.5.4 Service Menu 42
9.5.4.1 Service Function Submenu Layers 42
9.5.5 System Info Menu 43
9.5.5.1 System Info Submenu Layers 43
10 FIRMWARE UPDATES 45
10.1 Firmware Updates with the Cameo UNICON® 45
10.2 Firmware Updates with the Cameo CONNECT App 45
10.2.1 Cameo CONNECT Update Requirements (Windows) 45
10.2.2 Updating the Firmware with Cameo CONNECT (Windows) 45
11 MAINTENANCE 47
11.1 Product Maintenance 47
11.2 Storing the Device 47
12 REPAIR 48
13 DISPOSAL 49
13.1 Packaging Disposal 49
13.2 Device Disposal 49
14 DMX CONTROL TABLE 50
INDEX 60

1 DOCUMENT VERSION AND REVISIONS

Version	Date	Implemented changes
v1.0	11/2026	Original version

2 INTRODUCTION

2.1 YOU MADE THE RIGHT CHOICE!

This product has been developed and manufactured to the highest quality standards to ensure many years of problem-free operation. Find further information about Cameo on our website: www.cameolight.com

2.2 CONTACTS

	Adam Hall GmbH Headquarter	Customer Service
E-mail	info@adamhall.com	customerservice@adamhall.com
Phone	+49 6081 9419-0	+49 6081 941973-0
Street	Adam-Hall-Str. 1	Adam-Hall-Str. 1
Postal code / city	61267 Neu-Anspach	61267 Neu-Anspach
Website	*www.adamhall.com*	*www.adamhall.com*

2.3 LINK TO THE DOWNLOAD CENTRE

Find more product information and access the Download Centre via the product page.
Use the QR code to open the product page.
OPUS® SP6 FC

2.4 VISUALISATION CONVENTIONS IN THIS USER MANUAL

In this manual we use graphical symbols and icons in certain contexts. Find below a table with explanations and use cases of the graphical symbols and icons.

Icon / Symbol	Designation	Context	Explanation / Example
↙	**Prerequisite**	Tasks	Used in task topics to indicate a prerequisite that must be met before beginning the task.
⇨	**Result / Intermediate Result**	Tasks	Used in task topics to indicate a result or intermediate result of an action step.
1 Step **a)** Substep	**1 Action Step** **a) Substep**	Tasks	Used in task topics to indicate action steps and substeps.
1	**Callout**	Graphics; tasks	Text-image reference or labeling of certain functions on the device
[...]	**Value range indicator**	Technical data; paragraphs; lists	Indicates the range of a value, such as "Compressor ratio: **1:1...20:1**". Mostly used in tables or callouts.
*	**Asterisk**	Paragraphs; tables	Indicates additional information in a footnote.
The **LIM** LED lights up	**General User Interface element**	Paragraphs; tasks; tables; lists	The words presented in this way represent graphic user interface elements on the device.
PAGE button	**Key / Button**	Paragraphs; tasks; tables; lists	The words presented in this way represent user interface controls on the device.
`<name>`	**User input**	Paragraphs; tasks; tables; lists	The words presented in this way represent required user inputs.
https://adamhall.com	**Weblink**	Paragraphs; tables; lists	External link to a website

3 PRODUCT COMPLIANCE

3.1 MANUFACTURER'S DECLARATION

Adam Hall offers a voluntary, EU-wide manufacturer's guarantee of 2 years. The statutory warranty period is not affected by this voluntary guarantee.

Visit the Adam Hall Service Portal to access the **Download Centre**:

https://portal.adamhall.com/

Under the **Service & Regulations** section, you find our current detailed manufacturer's declarations, warranty conditions, and limitation of liability.

To request warranty for a product, please contact:

Adam Hall GmbH, Adam-Hall-Str. 1, 61267 Neu-Anspach

customerservice@adamhall.com

0049 (0)6081 / 9419-1000

3.2 DECLARATION OF CONFORMITY

Hereby, Adam Hall Ltd. declares that this product meets the following guidelines (where applicable)

- Electrical Equipment (Safety) Regulations 2016
- Electromagnetic Compatibility Regulations 2016 (SI 2016/1091)
- The Restriction of the Use of Certain Hazardous Substances in Electrical and Electronic Equipment Regulation 2012 (SI 2012/3032)
- Radio Equipment Regulations 2017 (SI 2016/2015)

Products that are subject to Electrical Equipment(Safety)Regulation 2016, EMC Regulation 2016 or RoHS Regulation can be requested at info@adamhall.com. Products that are subject to the Radio Equipments Regulations 2017 (SI2017/1206) can be downloaded at *http://www.adamhall.com/compliance*.

FCC STATEMENT

This device complies with part 15 of the FCC Rules. Operation is subject to the following two conditions:

1. This device may not cause harmful interference.
2. This device must accept any interference received, including interference that may cause undesired operation.

⚠ CAUTION! RF Exposure Information: This equipment complies with FCC radiation exposure limits set forth for an uncontrolled environment. This equipment should be installed and operated with minimum distance 20 cm between the radiator and your body.

⚠ CAUTION! Any changes or modifications to this device not explicitly approved by the manufacturer could void your authority to operate this equipment.

This equipment has been tested and found to comply with the limits for a Class B digital device, pursuant to part 15 of the FCC Rules. These limits are designed to provide reasonable protection against harmful interference in a residential installation. This equipment generates, uses and can radiate radio frequency energy and, if not installed and used in accordance with the instructions, may cause harmful interference to radio communications. However, there is no guarantee that interference will not occur in a particular installation. If this equipment does cause harmful interference to radio or television reception, which can be determined by turning the equipment off and on, the user is encouraged to try to correct the interference by one or more of the following measures:

- Reorient or relocate the receiving antenna.
- Increase the separation between the equipment and receiver.
- Connect the equipment into an outlet on a circuit different from that to which the receiver is connected to.
- Consult the dealer or an experienced radio/TV technician for help.

ISED STATEMENT

This device contains licence-exempt transmitter(s)/receiver(s) that comply with Innovation, Science and Economic Development Canada's licence-exempt RSS(s). Operation is subject to the following two conditions:

1. This device may not cause interference.
2. This device must accept any interference, including interference that may cause undesired operation of the device.

The digital apparatus complies with Canadian CAN ICES-005 (B)/NMB-005(B).

This equipment complies with IC RSS-102 radiation exposure limits set forth for an uncontrolled environment. This equipment should be installed and operated with minimum distance 20 cm between the radiator and your body.

This device meets the exemption from the routine evaluation limits in section 2.5 of RSS 102 and compliance with RSS 102 RF exposure, users can obtain Canadian information on RF exposure and compliance.

EU DECLARATION OF CONFORMITY

CE

Adam Hall GmbH hereby confirms that this product meets the following guidelines (where applicable):

- Low-Voltage Directive (2014/35/EU)
- EMC Directive (2014/30/EU)
- RoHS (2011/65/EU)
- RED (2014/53/EU)

Declarations of conformity for products subject to the LVD, EMC, RoHS Directive can be requested from info@adamhall.com. Declarations of conformity for products subject to RED can be downloaded from *http://www.adamhall.com/compliance*.

4 SAFETY INSTRUCTIONS

4.1 INTENDED USE

The **OPUS® SP6 FC** is intended for use as a motorised lighting device to generate controllable light output and movement in event and entertainment environments.
This product has been developed for the professional use in the field of event technology. Furthermore it is intended for qualified users with specialist knowledge of event technology only.
This product is intended for mobile applications and not for fixed installations.
This product is intended for indoor use only.
This product is not suitable for domestic use.
Do not use the product outside the operating conditions as stated in the user manual under Technical Data. Liability for damage and third-party damage to persons and property due to inappropriate use is excluded.
This product is not suitable for children and persons with limited physical, sensory, or mental capabilities or lack of experience and knowledge.

4.2 EXPLANATION OF SAFETY AND WARNING SYMBOLS

Find the following safety and warning symbols on the device, the user manual, or the packaging:


This symbol indicates that you must read the complete user manual before using the product.


This symbol indicates a general hazardous situation.


This symbol indicates hazards that can cause electric shock.


This symbol indicates hazards caused by hot surfaces.


This symbol indicates tripping hazards.


This symbol indicates hazards due to corrosive substances.


This symbol indicates hazards due to toxic substances.


This symbol indicates hazards due to leaking batteries.


This symbol indicates pinching hazards.


This symbol indicates hazards due to overhead loads.


This symbol indicates that looking or staring into the light source must be avoided.

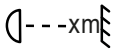

This symbol indicates the minimum distance in meters (m) between the light head and the illuminated surface. Find the corresponding value for this device under Technical Data in the complete user manual and as imprint on the housing of the device.



This symbol indicates that the product is for indoor use only.



This symbol indicates that the product is not suitable for household use.



This symbol indicates helpful hints or additional information.

4.3 STRUCTURE OF WARNING MESSAGES

In this user manual, warning messages are structured with a safety symbol, a signal word, a hazard description, and instructions on how to avoid injuries or death.



DANGER

Indicates a hazardous situation which will result in death or serious injury.



WARNING

Indicates a hazardous situation which could result in death or serious injury



CAUTION

Indicates a hazardous situation which could result in minor or moderate injury.



NOTICE

Indicates situations or conditions that could result in damage to property and/or the environment.

4.4 GENERAL SAFETY





- Read this document carefully.
- Keep this document for later reference.
- Follow closely the instructions in this document.
- This document is an integral part of the product. If you sell or pass on the product, you must include this document.
- Only use this product according to its intended use.
- Risk of choking. Keep small parts away from children and individuals with impaired physical, sensory, or mental capabilities.
- Risk of suffocation. Keep plastic bags away from children and individuals with impaired physical, sensory, or mental capabilities.
- Observe all safety instructions and warning messages in this document, on the device, and on the packaging.

- Products are subject to continuous further development. If you find discrepancies between this document and the product labeling, the information on the product always takes priority.
- Do not remove safety instructions or warning messages from the product.
- Do not open the device.
- Do not modify the product.
- If the product shows any sign of damage, do not use it.
- Do not operate the product with removed or missing covers.
- Do not expose the product to direct sunlight.
- If not further specified in the user manual under Technical Data, do not use the product in ambient temperatures that exceed 45 °C / 113 °F or fall below 0 °C / 32 °F
- Do not use the product in tropical climate.
- Do not use the product above 2000 metres of altitude.
- This device is not suitable for use in marine environments, including ships, offshore applications, or areas exposed to salt-laden air, seawater, or corrosive atmospheres. Use in such environments is at the user's own risk. Any damage or malfunction resulting from such use is excluded from the manufacturer's warranty.
- Use only accessories specified by the manufacturer.
- Maintenance and repairs may only be carried out by authorized service personnel.
- Store and transport the product in a dry and safe environment.
- Clean the product on a regular basis. If applicable, see the user manual for maintenance intervals.
- If the device was exposed to strong temperature changes, such as during transport, do not switch it on immediately. Wait until the device has reached ambient temperature.

4.5 ELECTRICAL SAFETY



- This is an electrical device in protection class I. Make sure that the protective conductor is connected to electrical earth. Do not disconnect the protective conductor.
- Do not bypass the mains fuse.
- Use only mains fuses as specified by the manufacturer.
- Do not use kinked or otherwise damaged power cables.
- Only operate the device on compliant, tested and intact mains power outlets.
- Do not use the device in the vicinity of water. Keep the device away from splashing or dripping water.
- Make sure that the voltage and frequency of the mains power match the values specified by the manufacturer.
- Take suitable measures against overvoltage, such as lightning strikes.
- For devices with a power out connector, make sure the total current consumption of all connected devices does not exceed the value specified by the manufacturer.
- This device is not suitable for continuous current.
- Disconnect the device from all poles before maintenance, repair or extended periods of non-use.
- Permanently connected power cables may only be replaced by a qualified service technician.

4.6 PHYSICAL SAFETY



- Make sure that all mounting connections are adequately dimensioned. Observe the relevant regional safety guidelines when mounting the device.



- Make sure that the device and any accessories are securely positioned. Secure against unintentional movement.
- Check all load-bearing screw connections regularly and replace them if necessary.



- Check all cable routes to prevent tripping accidents.
- Moving components, such as mounting brackets, pose a risk of pinching injuries.



- Devices with motor-driven components, such as moving lights, pose a risk of injury due to the movement of the appliance.

4.7 PHOTOBIOLOGICAL SAFETY



- This device is a risk group 1 device. Do not stare directly into the light outlet. Do not look directly into the light outlet with any optical instrument, such as magnifiers or binoculars.
- Risk of seizures. Stroboscopic effects may cause epileptic seizures in susceptible persons.
- Always point the lamp towards the ground, when it is not in use.

4.8 THERMAL SAFETY



- Do not install the device near heat sources, such as radiators or ovens.
- Do not block any ventilation openings.
- Unless otherwise stated, keep a minimum clearance of at least 20 centimetres around the device.
- Unless otherwise stated, keep flammable materials, such as paper or wood, at least 50 centimetres away from the device.
- Risk of burning. The device housing can become very hot during normal operation. Make sure that the housing cannot be touched accidentally. Allow the device to cool down sufficiently before dismantling, maintenance work, transport, or charging.
- Always adhere to the minimum distance to the illuminated surface, as stated on the device.

4.9 WIRELESS SAFETY



Risk of injury and damage to devices. Do not use W-DMX™ transmissions for safety-relevant applications, such as DMX-controlled motors, DMX-controlled hydraulic systems, or comparable moving components. Do not use W-DMX™ transmissions for pyrotechnic devices, gas effects, or liquid effects. This includes CO2 cannons, confetti shooters, and similar effects.

Radio transmitter operation is subject to official regulations. Make sure you adhere to regional guidelines before commissioning.

Radio operation can lead to potentially dangerous effects. Do not use this device in sensitive areas such as:

- Hospitals, health centres or other healthcare facilities that provide patient treatment with skilled personnel and equipment
- Explosive atmospheres, including:
  - ATEX zones (Zone 0, 1, 2, 20, 21, 22) (EU)
  - Hazardous Locations Class I, II and III (US/Canada)
- Restricted areas

- Military facilities
- Areas where the use of mobile phones is prohibited, such as aircraft.

Quality and performance of wireless signal transmissions is dependent on the environmental conditions. All range specifications refer to free-field application with visual contact without interference. Range and signal stability may be influenced by:

- Shielding, such as masonry, metal buildings, or water
- Interference
- High radio traffic, such as strong W-LAN networks
- Electromagnetic radiation, such as LED video walls or dimmers

4.10 DEVICE SAFETY

- Do not switch the device on and off in quick succession, because this will shorten the device lifetime.
- Do not lift the device by the head or the yoke. Only lift the device by the base carrying handles.
- Do not expose the device to direct sunlight, laser radiation, and bundled light beams from other spotlights to prevent damage to the housing and internal components.
  - Use the device's sunlight protection via DMX.

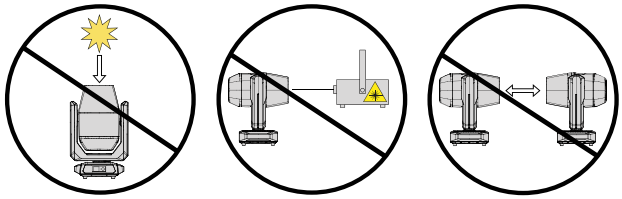

5 PRODUCT DESCRIPTION

5.1 PRODUCT OVERVIEW

The **OPUS® SP6 FC** is a Spot Profile Moving Head.

FEATURES:

- 600 W RGBALC LED
- CRI: > 99
- TLCI: > 95
- CCT range: 1,800 K … 10,000 K
- Fully closable framing system (±87°)
- Zoom range: 3.5° … 53°
- Interchangeable lenses (PC and Fresnel optics)
- Ultra-quiet fan modes
- Compatible with **Cameo CONNECT®** for NFC setup, service and firmware updates

5.2 OPTIONAL ACCESSORIES

Find various accessories for your product in the Adam Hall Shop:
https://www.adamhall.com/shop

Accessory	Article Number
OPUS® SP6 FC FRESNEL LENS	CLOSP6FCFLENS

SPECIFICATIONS (FRESNEL LENS)

- Material: ABS, Acrylic glass
- Colour: Black
- Zoom range: 6° … 57°
- Width: 220 mm
- Height: 200 mm
- Depth: 48 mm
- Weight: 2.3 kg

5.3 TECHNICAL DATA

PHOTOMETRIC VALUES

Parameter	Value
Luminous flux	14000 lm
Front lens diameter	171 mm
Exchangeable lens	Yes
LED PWM frequency	650 Hz, 1,530 Hz, 3,600 Hz, 12 kHz, 18.9 kHz, 25 kHz
Dimmer curves	Exponential, Logarithmic, S curve, Linear, Halogen

COLOURS

Parameter	Value
LED colours	Red, Green, Blue, Amber, Lime, Cyan
Calibration	Smart calibration
Colour rendering index (CRI)	> 99
Min. TLCI	95

MOVEMENT

Parameter	Value
Pan	630°
Tilt	270°

EFFECTS

Parameter	Value
Gobos	2 wheels; 1 fixed (7 gobos), 1 rotatable (7 gobos)
Prism layers	2
Prisms in total	2
Iris	Yes
Frost	2
Animation	Yes
Framing blades	Yes

CONTROL

Parameter	Value
Controller protocols	DMX512, RDM, Art-Net, sACN, W-DMX™ (Transceiver), CRMX
Data in connector	XLR 5-pole male, RJ-45 socket
Data out connector	XLR 5-pole female, RJ-45 socket

MAINS OPERATION

Parameter	Value
Operation voltage	100 V AC … 240V AC / 50 Hz … 60 Hz
Rated power	850W
Min. Cos Phi power factor (230 V)	0.99
Rated current	7.5A
Mains connector	Mains plug device outdoor male & TRUE1®
Mains fuse	T12A/250 V
Fuse replacement	Possible from the outside without opening
Power out connector	Mains plug device outdoor female & TRUE1®
Max. output current	12A

HOUSING

Parameter	Value
Cabinet material	ABS
Colour	Black

COOLING

Parameter	Value
Cooling system	Temperature controlled fan cooling
Cooling modes	Auto, Constant High, Constant Low, Constant Mid, Off

ENVIRONMENTAL

Parameter	Value
Protection class	IP20
Maximum air humidity (non-condensing)	80 %

DIMENSIONS & WEIGHT

Parameter	Value
Width	408 mm
Height	772 mm
Depth	273 mm
Weight	33 kg

5.4 USER INTERFACE

5.4.1 FRONT PANEL OVERVIEW

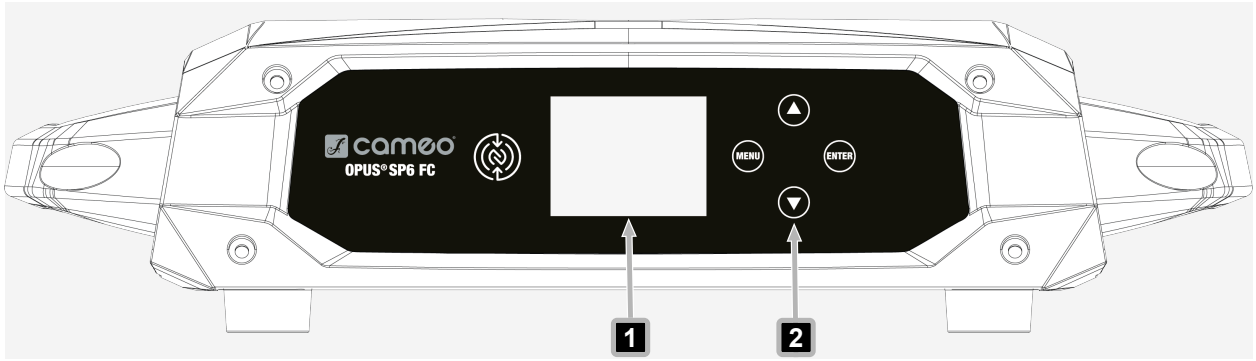

1 **LC - Display** - Main graphic display

2 **Touch-sensitive controls** - Opens the menu structure and navigates the device

5.4.2 REAR PANEL OVERVIEW

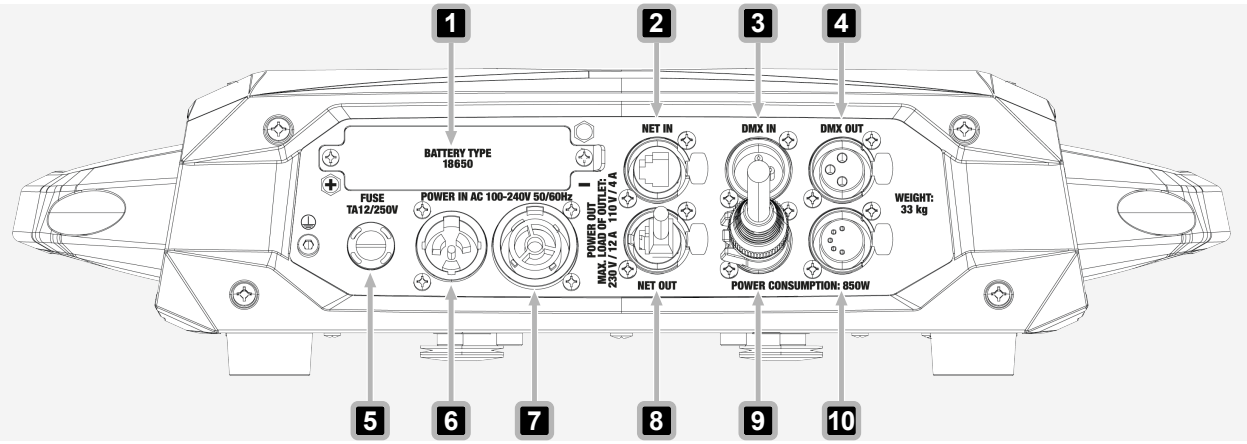

1 **Battery compartment** – Battery compartment for an 18650 battery. Use only batteries of the specified type.

2 **NET IN** - RJ45 network input connector to Art-Net or sACN network. When not in use, seal with rubber sealing cap

3 **DMX IN (3-pin)** - Male IP65 3-pin XLR socket for connection to a DMX controller. When not in use, seal with rubber sealing cap.

4 **DMX OUT (3-pin)** - Female IP65 3-pin XLR socket for relay of DMX control signal. When not in use, seal with rubber sealing cap.

5 **FUSE** - IP65 fuse holder for 5 × 20 mm fuses. Only replace with fuses of the same type and value, as specified under Technical Data. Reseal the fuse holder to ensure IP65 seal.

6 **POWER IN** - IP65 mains power socket. When not in use, seal with rubber sealing cap.

7 **POWER OUT** - IP65 mains power output socket. Enables power supply to other **CAMEO®** devices. Make sure that the total current consumption of all connected devices does not exceed the value specified on the device. When not in use, seal with rubber sealing cap.

8 **NET OUT** - RJ45 network output connector to Art-Net or sACN network. When not in use, seal with rubber sealing cap.

9 **DMX IN (5-pin)** - Male IP65 5-pin XLR socket for connection to a DMX controller. When not in use, seal with rubber sealing cap.

10 **DMX OUT (5-pin)** - Female IP65 5-pin XLR socket for relay of DMX control signal. When not in use, seal with rubber sealing cap.

6 GENERAL INFORMATION

6.1 ABOUT DMX TECHNOLOGY

6.1.1 DMX STANDARD

DMX (Digital Multiplex) is a universal transmission protocol for sending a serial data stream from controllers to fixtures. DMX is the common 'language' used to control a large number of fixture types and models from different manufacturers. Fixtures can be connected with one another and controlled via a central controller.

6.1.2 DMX CONNECTION

The DMX data stream is forwarded from one connected fixture to the next via the DMX input and DMX output connectors (3-pin XLR or 5-pin XLR). The maximum number of fixtures in the chain must not exceed 32 units. The last fixture in the chain must be equipped with a terminating resistor (terminator).
For optimum data transmission, it is necessary to keep the connecting cables between the individual fixtures as short as possible. The order in which the devices are integrated in the DMX network has no influence on the addresses.

6.1.2.1 CONNECTING MULTIPLE FIXTURES

1. Connect the male XLR connector (3-pin or 5-pin) of the DMX cable to the DMX output (female XLR socket) of the DMX controller.
2. Connect the female XLR connector (3-pin or 5-pin) of the DMX cable to the DMX input (male XLR socket) of the first fixture.
3. Daisy chain all other fixtures in the same way by connecting the DMX output (female XLR socket) to the DMX input (male XLR socket) of the next fixture.

> The maximum number of fixtures in the chain must not exceed 32 units.

6.1.3 PIN ASSIGNMENT

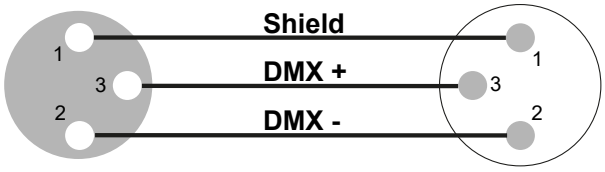

DMX cable with 3-pin XLR connectors

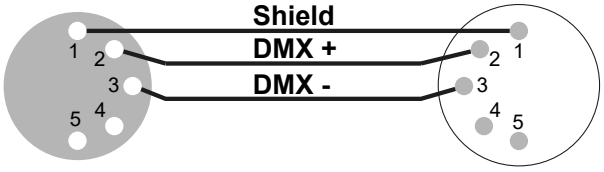

DMX cable with 5-pin XLR connectors (pin 4 and 5 are not used)

6.1.4 DMX TERMINATORS

The last fixture in a DMX chain needs to be equipped with a terminating resistor (120 Ω, 0,25 W) to prevent system errors.

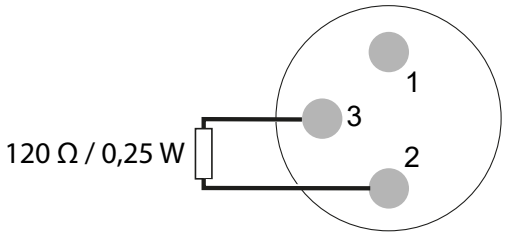

DMX Terminator 3-pin

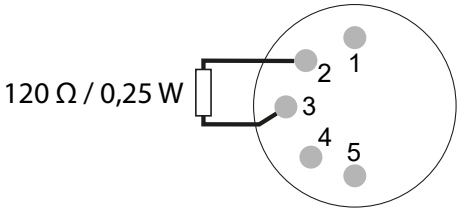

DMX Terminator 5-pin

6.1.5 DMX ADAPTERS

The combination of DMX fixtures with 3-pin connections and DMX fixtures with 5-pin connections in a DMX chain is possible with suitable adapters.

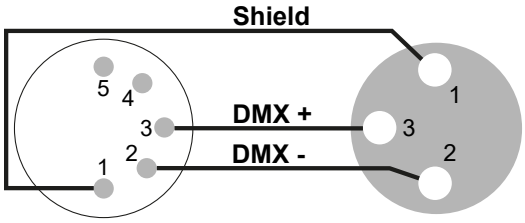

DMX Adapter 5-pin XLR male to 3-pin XLR female

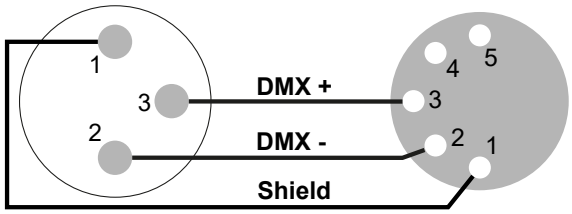

DMX Adapter 3-pin XLR male to 5-pin XLR female

7 PREPARATION

7.1 SCOPE OF DELIVERY

Item Description	Quantity
Device	1
Mains power cable	1
OMEGA BRACKET 3	2
Safety Compliance Information	1

7.2 TRANSPORT

NOTICE

Pan Lock or Tilt Lock unlocked during installation

Risk of damage to the device

a. Keep Pan Lock and Tilt Lock locked until the device is installed in its final position.

7.2.1 USING THE SIDE RECESSES OR BASE HANDLES FOR TRANSPORT

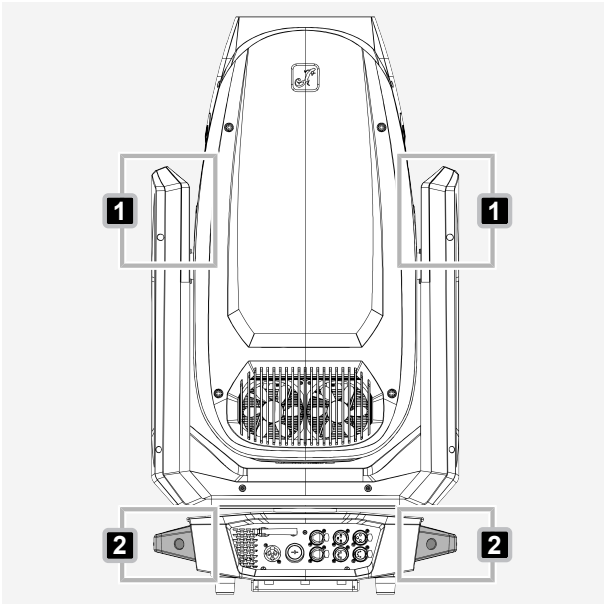

1 Use the recessed grips 1 to lift or reposition the fixture.

2 Use the transport handles 2 to move the fixture over longer distances.

NOTICE! Risk of damage to internal arm components. The recessed grips are intended only for lifting or short repositioning. To protect the internal arm components, use the transport handles exclusively for longer transports.

7.2.2 UNLOCKING THE TILT LOCK

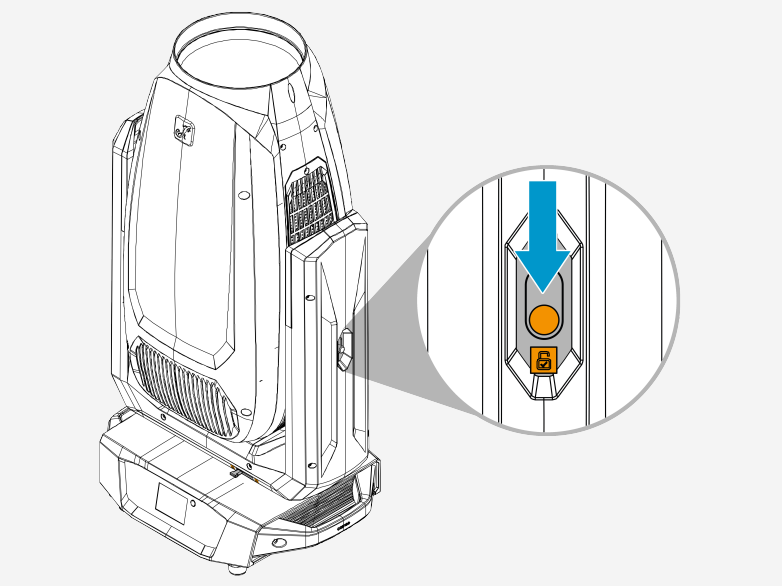

1 Slide the Tilt Lock mechanism to the unlocked position.

7.2.3 UNLOCKING THE PAN LOCK

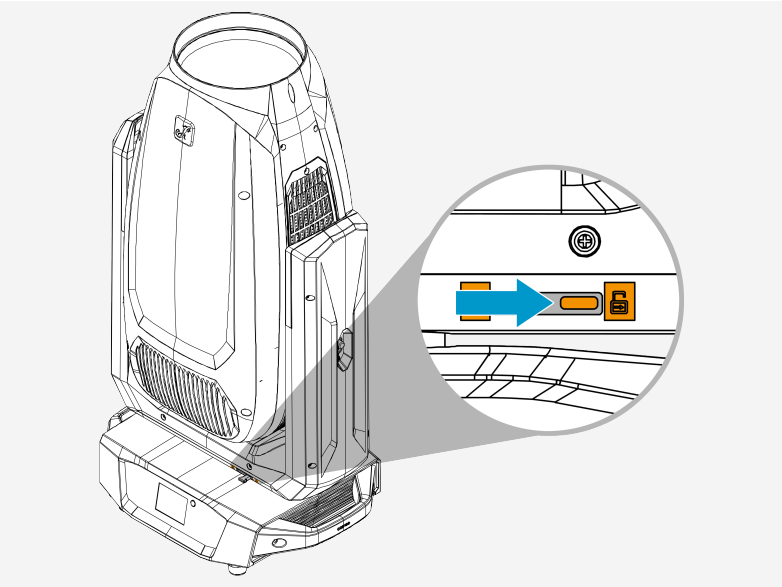

1 Slide the Pan Lock mechanism to the unlocked position.

7.2.4 LOCKING THE TILT LOCK

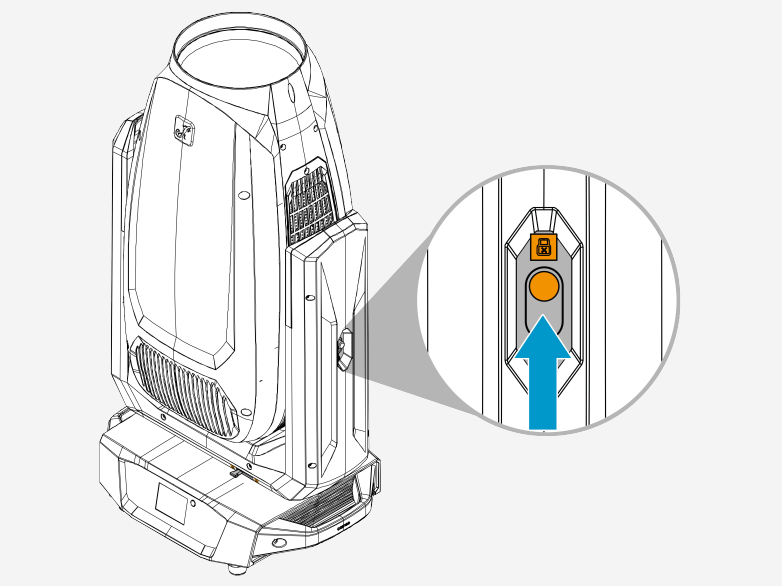

1. Disconnect the power supply.
   ⇨ The fixture is powered off.
2. Rotate the head until it aligns with the designated tilt-lock position.
3. Slide the Tilt Lock mechanism to the locked position.

7.2.5 LOCKING THE PAN LOCK

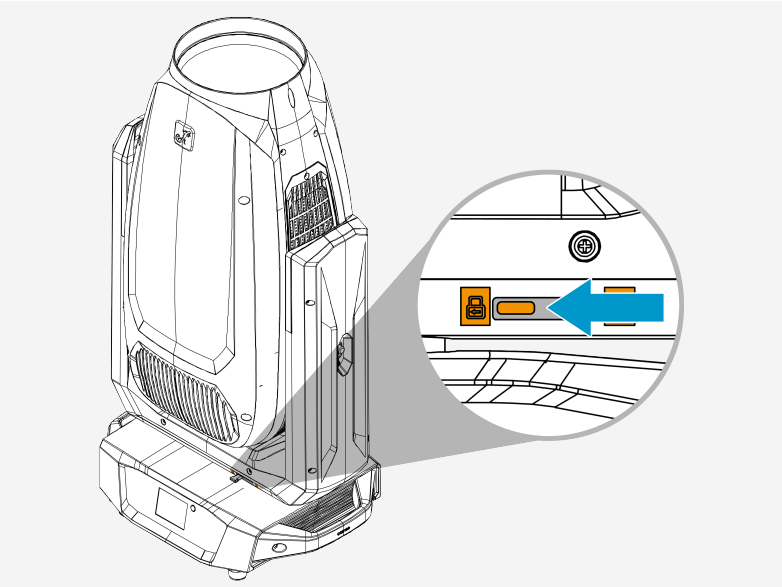

1. Disconnect the power supply.
   ⇨ The fixture is powered off.
2. Rotate the head until it aligns with the pan-lock position on the base.
3. Slide the Pan Lock mechanism to the locked position.

8 INSTALLATION

8.1 OMEGA BRACKET MOUNTING MECHANISM OVERVIEW



1 **Mounting bolt lever**

2 **Mounting bolt**

3 **Protrusion**

8.2 ATTACHING OMEGA BRACKETS

WARNING

Falling object

Risk of serious injury

a. Observe all regional safety regulations concerning overhead loads.
b. Make sure that the device is securely mounted.
c. Make sure that the mounting accessory supports the weight of the device.
d. Before any assembly, check that all mounting bracket components are complete, undamaged and work correctly.

CAUTION

Pinching Hazard

Risk of Injury

a. Be cautious while attaching the brackets. Handle with care to avoid injury.

NOTICE

Pan Lock or Tilt Lock unlocked during installation

Risk of damage to the device

a. Keep Pan Lock and Tilt Lock locked until the device is installed in its final position.

✓ Pan Lock and Tilt Lock are activated.

✓ The device is powered off.

1 Place the device on its side.

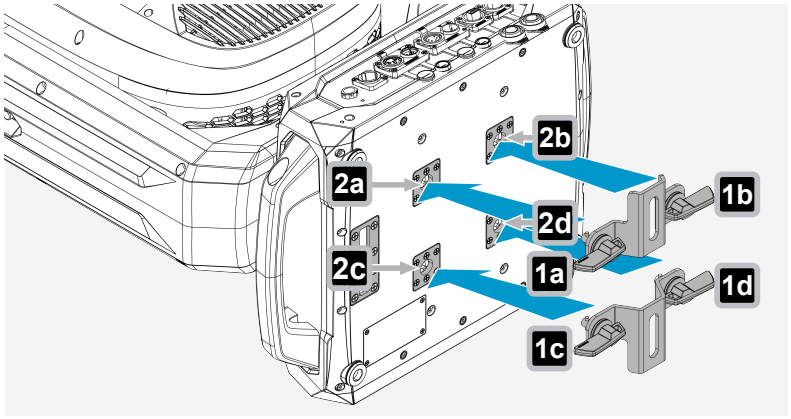

2 Align the mounting bolts **1** of the omega bracket with 2 mounting points **2** on bottom of the device.

ⓘ Make sure that the protrusions on the bolts **1** fit into the recesses of the mounting points **2**.

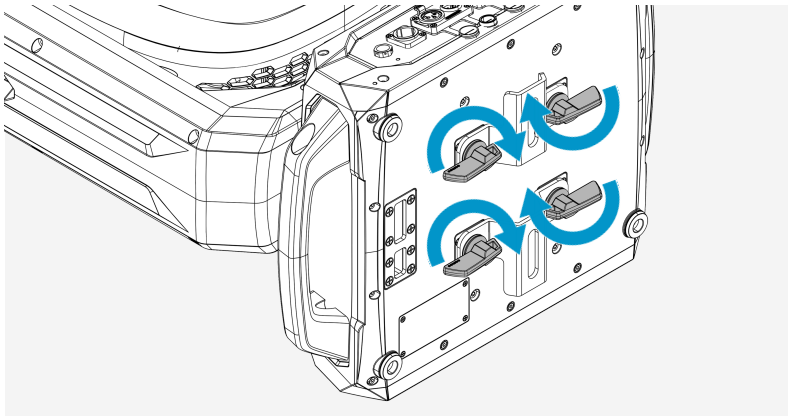

3 Turn the mounting bolt lever clockwise until it is tight.

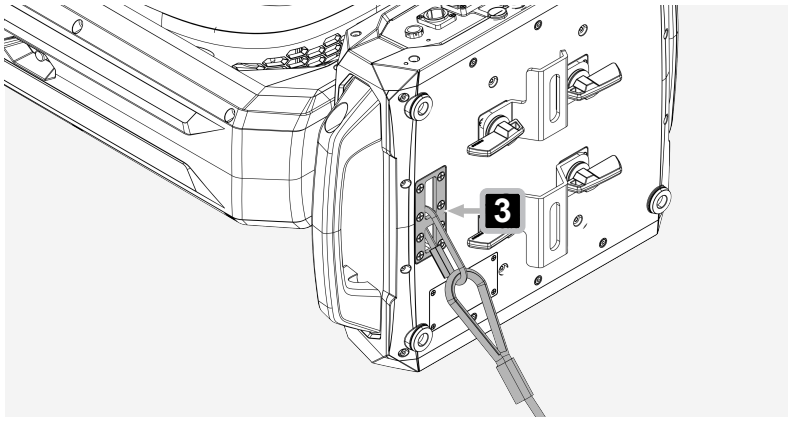

Attach the safety cable to the securing lug **3**.

ⓘ Suitable truss clamps are sold separately.

8.3 REPLACING THE FRONT LENS WITH THE FRESNEL LENS

CAUTION

Hot surface

Risk of burns

a. Allow the device to cool down completely before replacing the lens.

NOTICE

Damage to the optical system

a. Do not touch optical surfaces with bare fingers.
b. Do not use force during installation.
c. Store the removed lens in a clean and dry location.

✓ The device is powered off.

✓ The device is disconnected from the power supply.

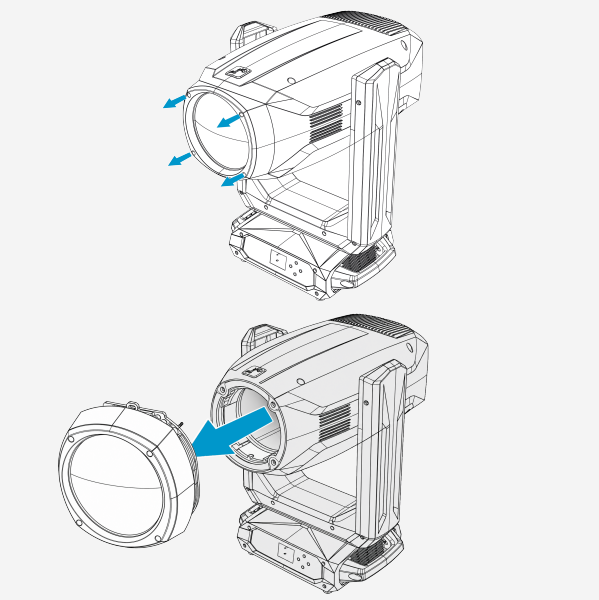

1 Place the fixture on a stable and level surface.
2 Loosen the 4 captive Phillips-head screws on the front lens assembly.
3 Remove the front lens from the fixture.
⇨ The fixture is ready for installation of the Fresnel Lens.

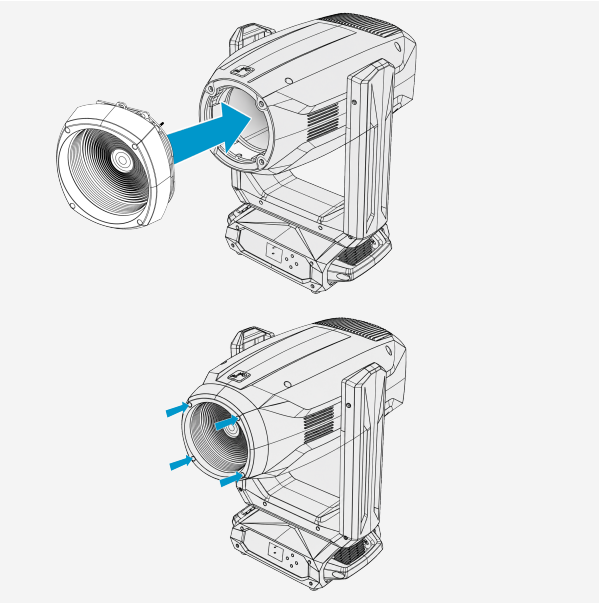

4 Position the Fresnel Lens (CLOSP6FCFLENS) on the front of the fixture.
5 Align the mounting holes of the Fresnel Lens with the threaded inserts on the fixture.

NOTICE

The Fresnel Lens is axis-symmetrical. The installation orientation is not relevant.

6 Tighten the 4 captive Phillips-head screws evenly.
7 Check that the Fresnel Lens is securely mounted.
⇨ The Fresnel Lens is installed and ready for operation.

9 OPERATION

9.1 POWER SUPPLY

9.1.1 CONNECTING A MAINS POWER CABLE

WARNING

Mains voltage

Risk of electric shock

a. Do not use kinked or damaged mains power cables.

NOTICE

Damage to the Device

a. Make sure that the voltage of the mains power socket matches the device operating voltage.

b. Use only supplied power cables or original Neutrik powerCON® TRUE1 cables. Otherwise you must not plug or unplug the device under load.

1 Plug the device power connector into the device. Make sure the bayonet connector is positioned correctly.

2 Turn the bayonet connector clockwise to lock it.

3 Plug the mains power connector into the mains power socket.

9.1.2 DISCONNECTING A MAINS POWER CABLE

NOTICE

Damage to the Device

a. Make sure that the voltage of the mains power socket matches the device operating voltage.

b. Use only supplied power cables or original Neutrik powerCON® TRUE1 cables. Otherwise you must not plug or unplug the device under load.

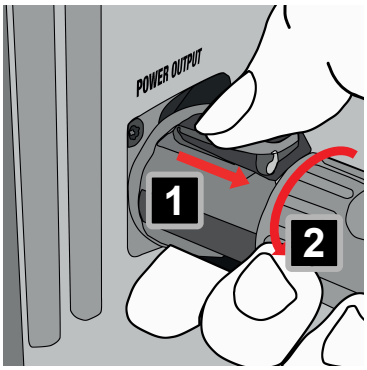

1 Disconnect the mains power connector of the mains power cable from the mains power socket.

2 Pull the locking lever of the bayonet connector backwards and hold it. 1

3 Turn the bayonet connector anticlockwise. 2

4 Pull the bayonet connector out of the socket.

9.2 DEVICE NAVIGATION

9.2.1 USING THE CONTROL PANEL

NOTICE

Control panel dirty or damp
Functionality impaired
a. Make sure that the control panel is dry and clean.
b. After configuring the device, activate the **Autolock** function in the settings.

OPERATION WITH ACTIVATED AUTOLOCK FUNCTION

Tap and hold ▲ and ▼ simultaneously for approximately 5 seconds to operate the device.

1 Tap **MENU** to access the main menu.
2 Tap ▲ or ▼ to navigate through the menu items.
3 Tap **ENTER** to access a submenu or to change the value of a menu item.
4 Tap ▲ or ▼ to change the value of a menu item.
5 Tap **MENU** to return to the next higher menu layer or the main display.

The selected menu item appears as the header of the new view, as shown in this example.

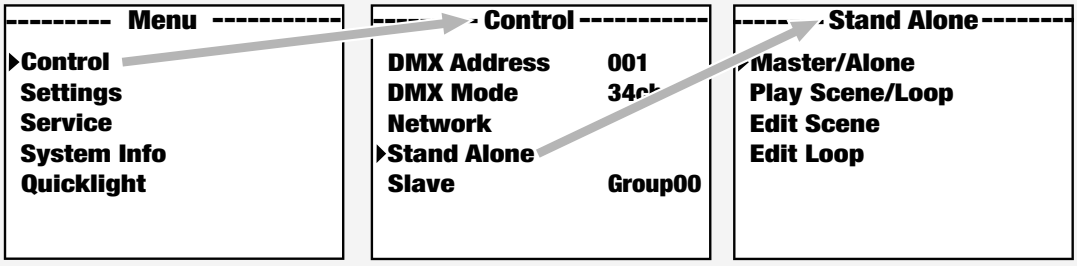

9.2.2 ACTIVATING / DEACTIVATING AUTOLOCK

The **Autolock** function prevents malfunctions caused by moisture or dirt on the control panel. Find below instructions for activating the **Autolock** function.

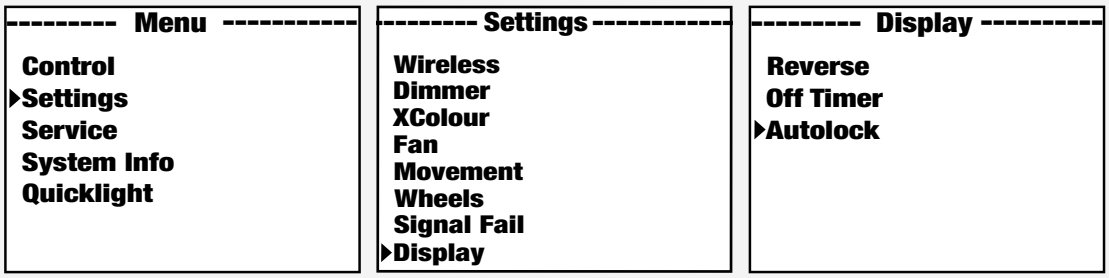

1 In the main menu, choose **Settings**>**Display**>**Autolock**.
2 Use the control panel to adjust the settings.
   a) Choose **On after 60s** to automatically lock the controls if there is no input for 60 seconds.
   b) Choose **Off** to deactivate the **Autolock** function.
3 Tap **ENTER** to confirm.

9.2.3 USING THE BATTERY-POWERED DISPLAY

The device has a battery-powered display. The battery-powered display allows to access and change settings without a power supply.

> When using the battery-powered display, all external device controls are deactivated. The main display indicates that there is no control signal.

1 Tap and hold **MENU** for approximately 10 seconds.
   ⇨ The display turns on.
2 Make the required settings.

9.3 DEVICE CONFIGURATION

9.3.1 SETTING THE DMX START ADDRESS

⚠ **WARNING!** Risk of eye damage. As soon as the DMX start address is entered, the device may immediately activate if a DMX signal is present and may cause glare.

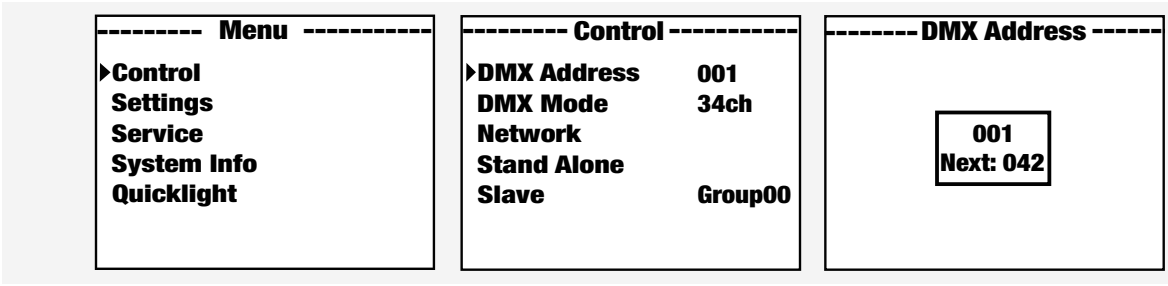

1 In the main menu, choose **Control**>**DMX Address**.
2 Use the control panel to adjust the desired DMX start address.
3 Tap **ENTER** to confirm.

9.3.2 SETTING THE DMX MODE

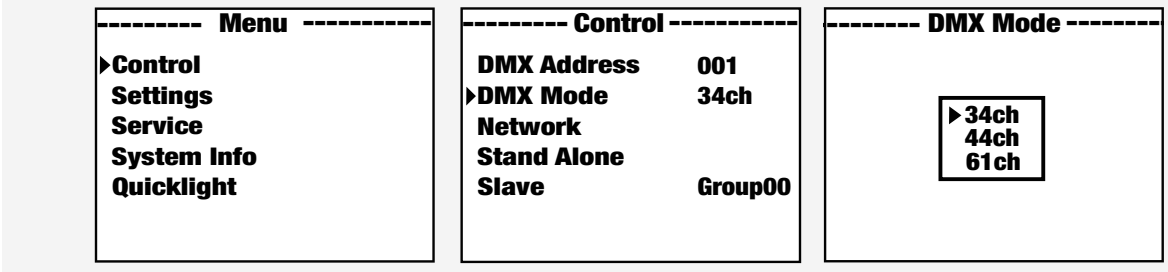

1 In the main menu, choose **Control**>**DMX Mode**.
2 Use the control panel to adjust the settings.
3 Tap **ENTER** to confirm.

> Find DMX tables with the channel assignments in the DMX CONTROL section of this user manual.

9.3.3 SETTING THE NETWORK

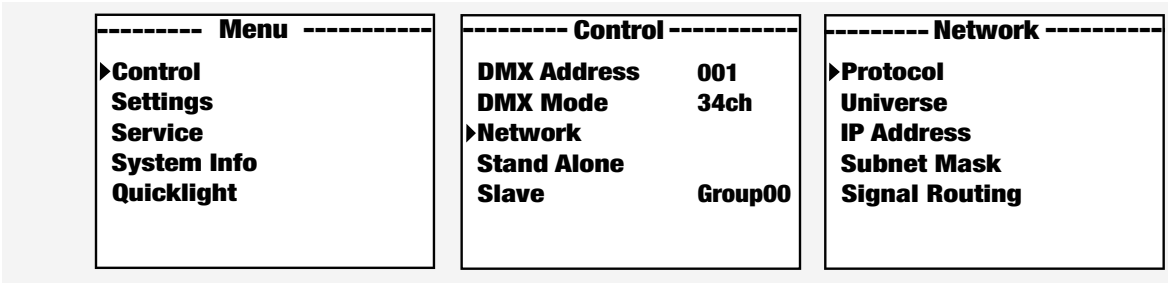

1 In the main menu, choose **Control**>**Network**.
2 Use the control panel to adjust the settings.
3 Tap **ENTER** to confirm.

9.3.4 SETTING THE IP ADDRESS

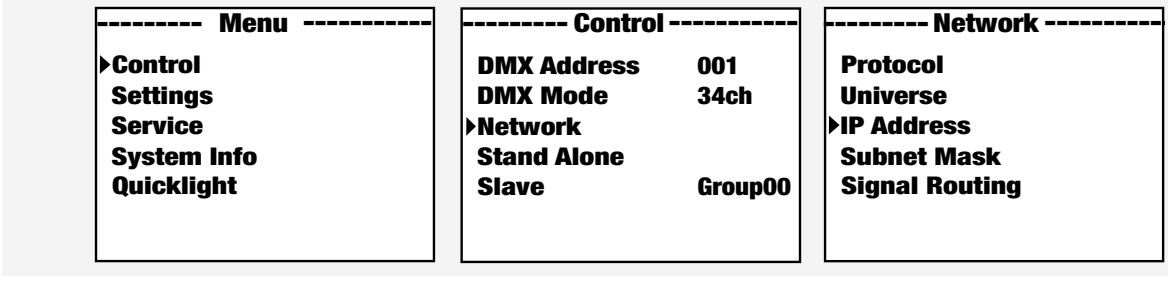

1 In the main menu, choose **Control**>**Network**>**IP Address**.
2 Use the control panel to adjust the settings block by block from left to right.
   a) Enter the values for each block.
   b) Tap confirm to move to the next block.
3 Tap **ENTER** to confirm.

9.3.5 SETTING THE SUBNET MASK

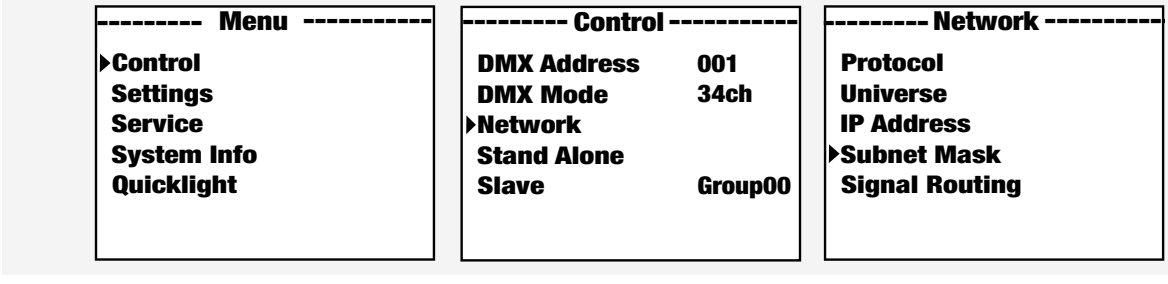

1 In the main menu, choose **Control**>**Network**>**Subnet Mask**.
2 Use the control panel to adjust the settings block by block from left to right.
   a) Enter the values for each block.
   b) Tap confirm to move to the next block.
3 Tap **ENTER** to confirm.

9.3.6 SETTING THE STAND-ALONE MODE

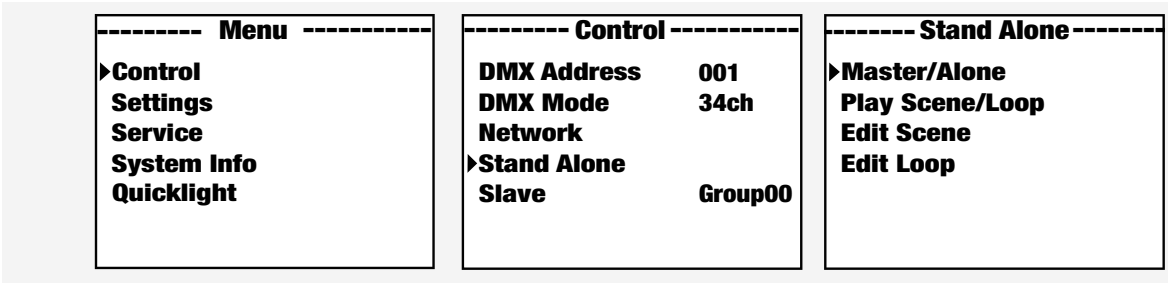

1 In the main menu, choose **Control**>**Stand Alone**.
2 Use the control panel to adjust the settings.
   a) Choose **Master/Alone**>**Master** to output the control signal to slave fixtures via XLR.
   b) Choose **Master/Alone**>**Alone** to deactivate the control signal output.
   c) Choose **Play Scene/Loop**>**Play Scene** to activate one of the eight available scenes (Scene 1–8).
   d) Choose **Play Scene/Loop**>**Play Loop** to activate one of the eight available scenes (Scene 1–8).
   e) Choose **Edit Scene** to customise a pre-programmed scene.
   f) Choose **Edit Loop** to customise a pre-programmed loop.
3 Tap **ENTER** to confirm.

9.3.7 SETTING THE SLAVE MODE

✓ You have activated the control signal output in the master unit by navigating to: **Control**>**Stand Alone**>**Master/Alone**>**Master**.

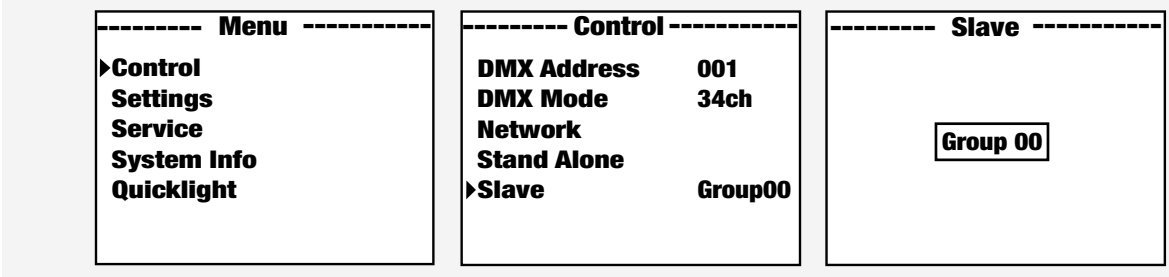

1 In the main menu, choose **Control**>**Slave**.
2 Tap **ENTER** to confirm.

9.3.8 EXTENDED SLAVE MODE

9.3.8.1 SETUP FOR A RUNNING LIGHT EFFECT



9.3.8.2 SETUP FOR A RUNNING LIGHT EFFECT WITH MASTER AND FIRST SLAVE IN SYNC



9.3.9 PAIRING A WIRELESS DMX RECEIVER WITH A TRANSMITTER

✓ The transmitter and the receiver are located within the same wireless operating range.

1 In the receiver's menu, select **Settings**>**Wireless**>**Operation mode**>**Receive**.
2 In the receiver's menu, select **Settings**>**Wireless**>**Linking**>**Receive Reset**.
⇨ The receiver is now ready to pair and waiting for a pairing request.
3 In the transmitter's menu, select **Settings**>**Wireless**>**Operation mode**>**Transmit CRMX/G4/G3**.
4 In the transmitter's menu select **Settings**>**Wireless**>**Linking**>**Link**.
⇨ The receiver and transmitter will pair automatically.
⇨ The wireless DMX link between fixtures remains active until it is manually disconnected.

ⓘ Repeat steps 1 and 2 for each receiver you want to connect to a single transmitter.

9.3.10 ABOUT LINKING KEY

A **Linking Key** is an eight-digit numerical code used to pair wireless DMX transmitters and receivers in lighting fixtures. The key always consists of exactly eight characters, and all eight positions must be filled. Each position can contain any digit from 0 to 9.

9.3.11 PAIRING A WIRELESS DMX RECEIVER WITH A TRANSMITTER VIA LINKING KEY

✓ The transmitter and the receiver are located within the same wireless operating range.

1 In the receiver's menu, select **Settings**>**Wireless**>**Operation mode**>**Receive**.
2 In the receiver's menu, select **Settings**>**Wireless**>**Linking**>**Linking Key**.
3 Enter the user-defined `Linking Key`.

ⓘ The same key must be set on both the transmitter and the receiver.

4 In the transmitter's menu, select **Settings**>**Wireless**>**Operation mode**>**Transmit CRMX/G4/G3**.
5 In the transmitter's menu, select **Settings**>**Wireless**>**Linking Key**.
6 Enter the same `Linking Key` as on the receiver.
⇨ The receiver and transmitter will pair automatically once both devices share the same **Linking Key**.
⇨ The wireless DMX link between fixtures remains active until it is manually disconnected.

ⓘ Repeat the process for each receiver to pair several receivers to one transmitter (such as for master/slave operation).

9.3.12 UNLINKING A WIRELESS DMX RECEIVER FROM A TRANSMITTER

There are two ways to disconnect the wireless DMX link:

UNLINK FROM THE RECEIVER

1 On the device configured as the receiver, select **Reset** to remove the existing pairing.
⇨ The receiver is now unlinked and ready for a new pairing if needed.

UNLINK FROM THE TRANSMITTER

2 On the device configured as the transmitter, select **Unlink** to disconnect all paired receivers from the transmitter.

ⓘ After performing either option, the wireless DMX connection is fully disconnected. The devices will not reconnect automatically unless paired again.

9.3.13 CONFIGURING QUICKLIGHT

Create a static lighting scene directly on the device without using an external controller or DMX console. By defining these basic settings, the device will maintain the configured position and light output.

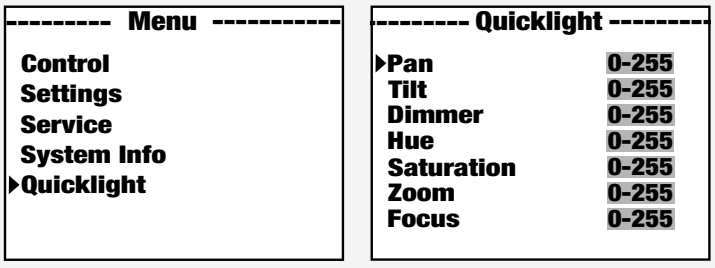

1 In the main menu, choose **Quicklight**.
2 Use the control panel to adjust the settings:
   a) **Pan**: Choose a value between 0 and 255 to set the horizontal position of the head.
   b) **Tilt**: Choose a value between 0 and 255 to set the vertical position of the head.
   c) **Dimmer**: Choose a value between 0 and 255 to set the light intensity (0 = off, 255 = maximum brightness).
   d) **Hue**: Choose a value between 0 and 255 to set the base colour (0 = starting colour, 255 = end of colour range).
   e) **Saturation**: Choose a value between 0 and 255 to adjust the colour saturation (0 = no colour saturation, 255 = full saturation).
   f) **Zoom**: (Beam size) Choose a value between 0 and 255 to adjust the beam angle (0 = narrow beam, 255 = wide beam).
   g) **Focus**: Choose a value between 0 and 255 to adjust the focus (0 = softest focus, 255 = sharpest focus).
3 Tap **ENTER** to confirm.

9.4 MAIN SCREEN OVERVIEW

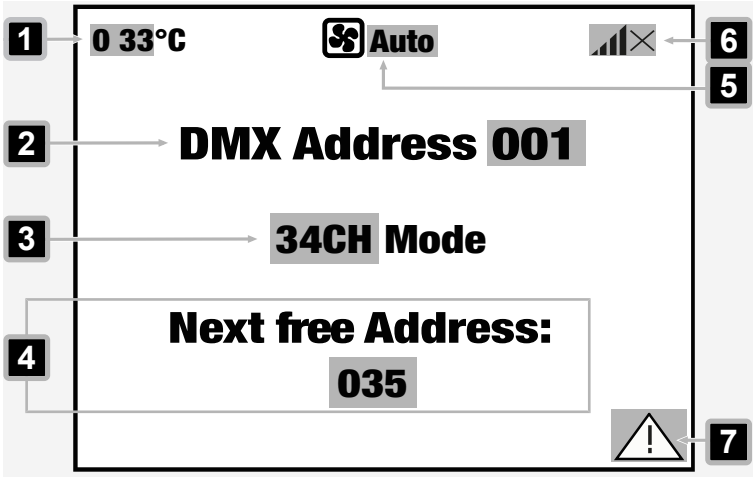

1 **°C** - Indicates the illuminant temperature in °C.

2 **DMX Address** - Indicates the set DMX start address.

3 **Mode** - Indicates the set DMX mode (**34CH**, **44CH**, **61CH**).

4 **Next free address:** - Indicates the channel offset to the next available DMX start address, based on the selected channel mode.

5 **W-DMX settings** - Indicates the status of the wireless DMX connection. (?↓ , ↯↓ , ×↓ , ↓ , ↑ , ×)

6 - Displays the selected fan mode (**Auto**, **Off**, **Constant Low**, **Constant Mid**, **Constant High**)

7 ⚠ - Indicates an error in one or more device component(s). Find details on current errors under **Info>Error** Info.

9.5 SUBMENUS

9.5.1 ABOUT THE SUBMENUS

Find detailed explanations of all submenu layers in the submenu visual guide. Each section begins with a graphic showing its exact position within the menu structure, followed by tables listing the available submenu items.

- *Functional descriptions of the menu items are shown in italics* **1** .
  (This applies to the final selectable menu item in each layer.)
- Factory settings are highlighted in **bold** **2** .

Example:

Layer 3	Layer 4	Function Description
State	On	*Activates the wireless module* **1**
	Off **2**	*Deactivates the wireless module* **1**

9.5.2 CONTROL MENU

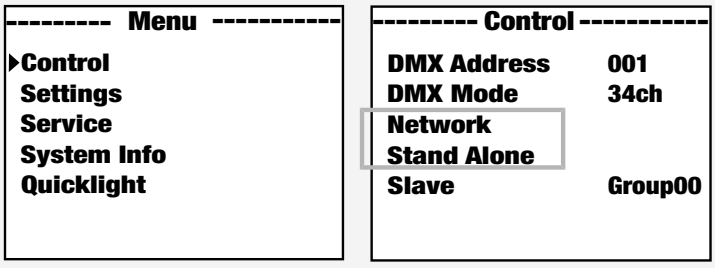

9.5.2.1 NETWORK ART-NET SUBMENU LAYERS

Layer 3	Layer 4	Layer 5 */ Function Description*	
Protocol	Artnet	*Control via* Art-Net	
	sACN	*Control via* sACN	
Universe	Absolute Univ.	*Sets the absolute* Art-Net *universe*	*Depends on net, subnet, and universe*
	Net	*Sets the* Art-Net *network*	*Depends on absolute universe*
	Subnet	*Sets the* Art-Net *subnet*	
	Universe	*Sets the* Art-Net *universe*	
IP Address	xxx.xxx.xxx.xxx	*Sets the IP address*	
Subnet Mask	xxx.xxx.xxx.xxx	*Sets the subnet mask*	

Layer 3	Layer 4	Layer 5 */ Function Description*
Signal Routing	**Send to XLR**	*Relays the control signal to* XLR Out
	Backup by XLR	*Controls via* XLR *with network signal interruption*
	Receive only	*No connection between the network signal and* XLR *connectors*

9.5.2.2 NETWORK SACN SUBMENU LAYERS

Layer 3	Layer 4	Layer 5 */ Function Description*
Protocol	Artnet	*Control via* Art-Net
	sACN	*Control via* sACN
Universe	Absolute Univ.	*Sets the* sACN *universe*
IP Address	xxx.xxx.xxx.xxx	*Sets the IP address*
Subnet Mask	xxx.xxx.xxx.xxx	*Sets the subnet mask*
Signal Routing	**Send to XLR**	*Relays the control signal to* XLR Out
	Backup by XLR	*Controls via* XLR *with network signal interruption*
	Receive only	*No connection between the network signal and* XLR *connectors*

9.5.2.3 STAND-ALONE SUBMENU LAYERS

Layer 3	Layer 4	Layer 5 / Layer 6 / *Function Description*		
Master/Alone	Master	*Relays the control signal via* DMX OUT		
	Alone	*Does not relay the control signal*		
Play Scene/Loop	Scene	Scene 1 … 8	*Selects and activates the desired scene*	
	Loop	Loop 1 … 8	*Selects and activates the desired loop*	
Edit Scene	Scene 1 … 8	Pan	*Sets each scene individually. Scenes are activated by selecting them.*	
		Tilt		
		Dimmer		
		...		
Edit Loop	Loop 1 … 8	Step	1 … 8	*Selects step 1 … 8*
		t-Step	0s … 20min	*Sets the step time*
		t-Fade	0s … 20min	*Sets the fade time*
		User Color/Scene	1 … 8	*Selects scene 1 … 8*

9.5.3 SETTINGS MENU

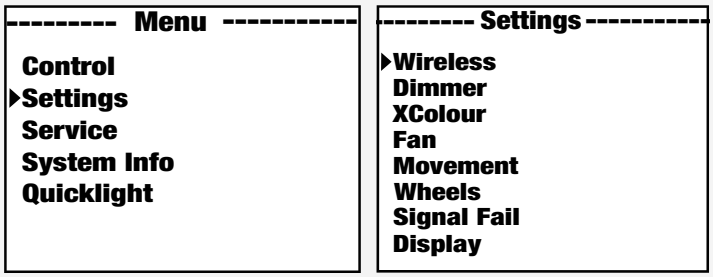

9.5.3.1 WIRELESS SUBMENU LAYERS

Layer 3	Layer 4	Layer 5 / *Function Description*	
State	On	*Activates the wireless module*	
	Off	*Deactivates the wireless module*	
Operation Mode	**Receive**	*Wireless module = receiver*	
	Transmit CRMX	*Wireless module = transmitter with* CRMX *transmitter standard*	
	Transmit G4s	*Wireless module = transmitter with* G4s *transmitter standard*	
	Transmit G3	*Wireless module = transmitter with* G3 *transmitter standard*	
Linking	Mode Receive: Receive Reset	*Resets the receiver and puts it in pairing standby mode*	
	Mode Transmit: Link	*Pairs with compatible, ready-to-pair wireless devices*	
	Mode Transmit: Unlink	*Disconnects wireless* DMX *connections and places in pairing standby mode*	
Linking Key	Linking Key	*Sets the connection key*	
	CRMX Mode (only available with operation mode = Receive)	**CRMX**	*Receiver standard* = CRMX
		CRMX2	*Receiver standard* = CRMX2
	CRMX Universe (only available with operation mode = Receive)	**A** … H	*Selects* CRMX *universe A to H*
Universe Metadata	RGB Color Code	Red Orange Yellow Green Cyan	RGB *code for colour display of the universe*

Layer 3	Layer 4	Layer 5 / *Function Description*	
		Blue Purple White	
	Universe Name	*A 16-character string with a customisable name that identifies the universe*	

9.5.3.2 DIMMER SUBMENU LAYERS

Layer 3	Layer 4	*Function Description*
Curve (Dimmer Curve)	**Linear**	*Light intensity increases linearly with* DMX *value*
	Exponential	*Adjusts the light intensity finely at lower* DMX *values and broadly at higher* DMX *values*
	Logarithmic	*Adjusts the light intensity broadly at lower* DMX *values and finely at higher* DMX *values*
	S-Curve	*Adjusts the light intensity finely at lower and higher* DMX *values and broadly at medium* DMX *values*
	Halogen	*Tungsten dimmer curve*
PWM Frequency	650Hz **1530Hz** 3600Hz 12kHz 18.9kHz 25kHz	*Selects the* LED PWM *frequency*
Response	**LED**	*The device responds immediately to changes of the* DMX *value*
	Halogen 1kW	*The light behaves in a similar way to a halogen light with gradual changes of brightness*
	Halogen 2kW	
	Halogen 5kW	
Redshift	Dim to Warm	*Simulates the colour drift when dimming a halogen light. When dimming the light, the colour temperature changes automatically to increasingly warm white tones and amber (and vice versa).*
	Off	*Disables the function*

9.5.3.3 XCOLOUR SUBMENU LAYERS

Layer 3	Layer 4	*Function Description*
Optimization Mode	**Brightness**	*Calibrated colour mixing for all colours*
	Quality	*Optimised for CRI*
	Disabled	*Direct control at all colours, no calibration*

Layer 3	Layer 4	*Function Description*
Colour Space	**Native**	*Full colour space with calibrated white (smart calibration)*
	sRGB	*sRGB standard preset*
	DCI P3	*DCI P3 standard preset*
	Adobe RGB	*Adobe RGB standard preset*
	REC2020	*REC2020 standard preset*
White Point	**By Color Space**	*Standard by colour space preset*
	6500K	*User-defined white point*
	5600K	
	4000K	
	3200K	
	2700K	
CCT Brightness	Constant	*Constant brightness at all* CCT *values (reference is 2700 K)*
	Maximum	*Maximum brightness at all* CCT *values*

9.5.3.4 FAN SUBMENU LAYERS

Layer 3	*Function Description*
Auto	*Automatic fan control (controls fans by dimmer value and the device temperature)*
Off	*Deactivates the fans*
Constant Low	*Constant low fan speed with reduced brightness, if necessary*
Constant Mid	*Constant average fan speed with reduced brightness, if necessary*
Constant High	*Constant high fan speed*

9.5.3.5 MOVEMENT SUBMENU LAYERS

Layer 3	Layer 4	*Function Description*
Pan Reverse	On	*Reverses the pan direction*
	Off	*Keeps the pan direction*
Tilt Reverse	On	*Reverses the tilt direction*
	Off	*Keeps the tilt direction*
Pan Angle	**540°**	*Sets the maximum pan angle to 540°*
	630°	*Sets the maximum pan angle to 630°*
Position Feedback	**On**	*Enables automatic position correction*
	Off	*Disables automatic position correction*
Move in Black	On	*Blackout during head movement*
	Off	*No blackout during head movement*
Silent Movement	On	*Slowed motor movements for quieter operation*

Layer 3	Layer 4	*Function Description*
	Off	*Disables the function*
Motor Reset	**Fast**	*Performs the reset procedure using a reduced movement range in combination with calibration values. Enables faster and more precise resetting movements.*
	Normal	*Performs the reset procedure over the entire movement range*

9.5.3.6 WHEELS SUBMENU LAYERS

Layer 3	Layer 4	Layer 5 / *Function Description*	
Gobo Wheel	Position	Clockwise	*Gobo wheel rotation direction is always clockwise*
		Shortest Way	*Gobo wheel rotates the shortest way to new position*
	Movement	**Snap**	*Gobo wheel moves directly to centred gobo position*
		Scroll	*Gobo wheel rotates continuously*
Move in Black	On	*Enables a blackout during gobo and colour wheel movements to hide visible transitions*	
	Off	*Allows wheel movements to remain visible without triggering a blackout*	
Framing Control	**Left & Right**	*Controls the left and right sides of the blade independently to create asymmetric or freely shaped shutter positions*	
	Position & Angle	*Adjusts the blade using a single insertion position and an angle parameter for classic framing control*	

9.5.3.7 SIGNAL FAIL SUBMENU LAYERS

Layer 3	*Function Description*
Hold	*Retains the last command if signal is lost*
Blackout	*Activates blackout if signal is lost*
Fade to Black (10s)	*10-second fade to blackout if signal is lost*
Last Stand Alone	*Activates the last selected stand-alone operation mode if signal is lost*
Full	*Switches to full output if signal is lost*

9.5.3.8 DISPLAY SUBMENU LAYERS

Layer 3	Layer 4	*Function Description*
Reverse	On	*180° display rotation (for example, for overhead installation)*
	Off (if Auto is not available)	*No display rotation*
	Auto	*Automatic position detection (upright/ overhead mounting)*
Off Timer	Always On	*Permanently on*
	Off after 20s	*Deactivates after approximately 20 seconds of inactivity*
Autolock	On after 60s	*Controls locked after approximately 60 seconds without input (*LOCKED*). Unlock: Tap ▲ and ▼ simultaneously for approximately 5 seconds.*
	Off	*Deactivates* Autolock

9.5.4 SERVICE MENU

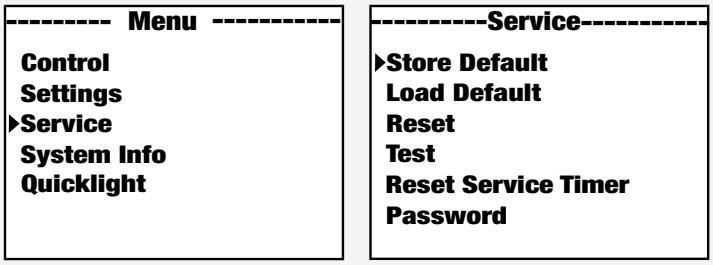

9.5.4.1 SERVICE FUNCTION SUBMENU LAYERS

Layer 2	Layer 3	Layer 4	Layer 5 / *Function Description*
Store Default	User A		*Saves all current settings as user preset A*
	User B		*Saves all current settings as user preset B*
	User C		*Saves all current settings as user preset C*
Load Default	Factory		*Resets to factory setting*
	User A		*Resets to user A values*
	User B		*Resets to user B values*
	User C		*Resets to user C values*
Reset	Pan/Tilt		*Resets pan/tilt motors*
	Head		*Resets motors in the device head*
	Gobo/Animation		*Resets gobo wheel and animation wheel*
	Zoom/Focus		*Resets zoom and focus motors*
	Framing/Iris		*Resets framing and iris motors*
	Prism/Frost		*Resets prism and frost motors*

Layer 2	Layer 3	Layer 4	Layer 5 / *Function Description*	
	All		*Resets all motors*	
Test	Test Sequence		*Pre-programmed sequence to test all components*	
	Stress Test		*Pre-programmed sequence to test all components under maximum load*	
	Motor Test		Pan	*Activates all motors individually with values of 000 to 255*
			Tilt	
			...	
Reset Service Timer	No		*Does not reset the service operation time*	
	Yes	Reset Now	*Resets the service operating time*	
Password	*For service purposes only.*			

9.5.5 SYSTEM INFO MENU

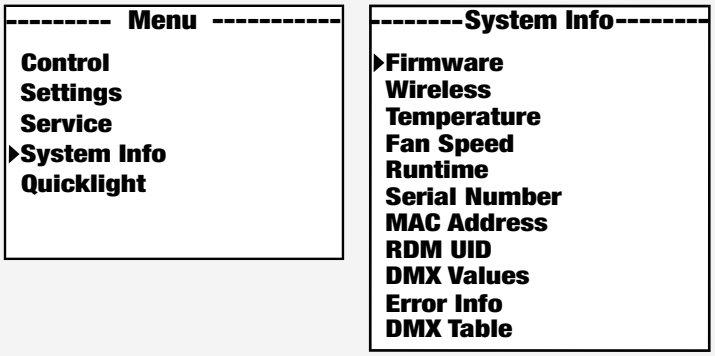

9.5.5.1 SYSTEM INFO SUBMENU LAYERS

Layer 2	Layer 3 / Layer 4 / *Function Description*			
Firmware	DISP	vx.x.x	*Displays the firmware version of the corresponding component*	
	NET	vx.x.x		
	DRV	vx.x.x		
	...			
Wireless	Module		*Displays the wireless module model*	
	Device Name		*Displays the device name*	
	Version		Hardware	*Hardware version number*
			Software	*Software version number*
	Link Quality		%	*Connection quality in per cent*
	Status		Operational	*Status information*
			DMX Data	
			RDM Identify	
			RF Link	

Layer 2	Layer 3 / Layer 4 / *Function Description*			
			Link State	
Temperature	LED		xxx° C / ° F	*Displays the temperature of the corresponding component*
	Base		xxx° C / ° F	
	...			
	Temperature Unit		**° C**	*Sets the temperature unit*
			° F	
Fan Speed	Fan X		*Displays the speed of the corresponding fans*	
	Fan Y			
	...			
Runtime	Total		xxxx h : xx m	*Total operating time*
	Operation		xxxx h : xx m	*Time in use*
	LED	Total	xxxx h : xx m	*Lamp operating time*
		Red		
		Green		
		Blue		
		...		
	Service		xxxx h : xx m	*Operating time after resetting the service operating time*
Serial Number	*Displays the device serial number*			
MAC Address	xx:xx:xx:xx:xx:xx		*MAC address*	
RDM UID	RDM Unique Identifier			
DMX Values	*Displays the* DMX *values present*			
Error Info	*Displays an error in case of malfunction*			
DMX Table	*Displays* DMX *mode tables*			

10 FIRMWARE UPDATES

10.1 FIRMWARE UPDATES WITH THE CAMEO UNICON®



Update your device firmware using a dedicated update setup.

The update process requires:

- CLIREMOTE

> ⓘ The device includes detailed instructions and the required cable for performing the software update.

Further information and ordering options are available here: *UNICON® - Remote control for DMX fixtures*

10.2 FIRMWARE UPDATES WITH THE CAMEO CONNECT APP

The **Cameo CONNECT** app communicates with **CAMEO** devices via RDM-enabled Art-Net nodes. The app supports firmware updates and additional RDM-based functions.
Use the Windows version to update newer devices.
Download the latest version from: *Adam Hall Service Portal*.
The mobile version, available on Google Play Store and Apple App Store, is primarily intended for device configuration. From July 2026, the mobile version also supports RDM functionality.

10.2.1 CAMEO CONNECT UPDATE REQUIREMENTS (WINDOWS)

- Windows PC
- Compatible network configuration for Art-Net communication
- Art-Net node with Art-Net 4 support (RDM enabled on the ports in use)

SUPPORTED ARTICLE NUMBERS:
CLNODE1; *CLXNODE4*; *CLXNODE8*

10.2.2 UPDATING THE FIRMWARE WITH CAMEO CONNECT (WINDOWS)

✓ You have downloaded the latest version of the app from the *Adam Hall Service Portal*.

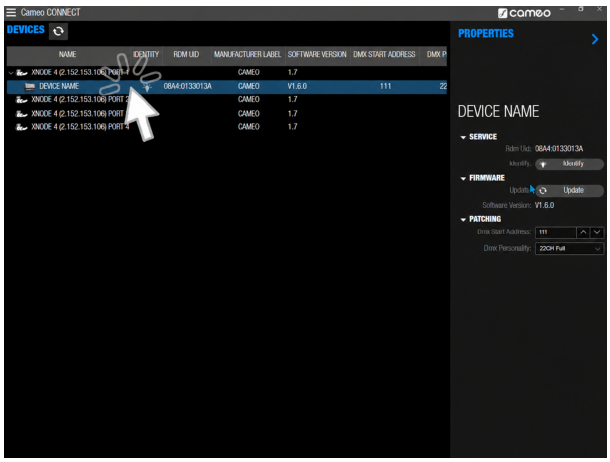

1. Open the Cameo CONNECT App on your Windows PC.
   ⇨ The application opens in the **DEVICES** list.
2. In the **DEVICES** list, identify the available Art-Net nodes and their ports.
   ⇨ The app detects all connected RDM devices.
3. Select an Art-Net node or RDM device to display its properties.

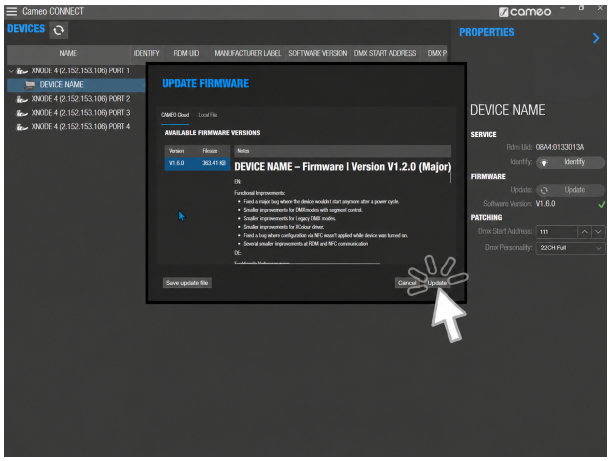

4 In the **FIRMWARE** section, click **Update**.

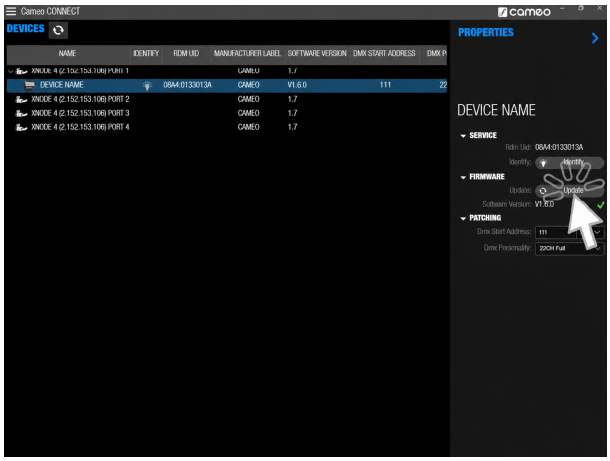

⇨ The **UPDATE FIRMWARE** dialogue opens and displays the available firmware versions with their release notes.

5 To start the update, click **Update**.

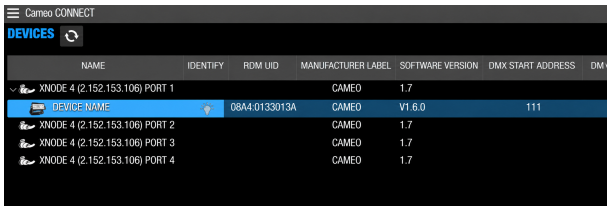

⇨ The required update files download and install automatically.

NOTICE

Interrupting the update process can damage the device firmware.

a. Do not disconnect the power supply.
b. Do not disconnect DMX cables.
c. Do not disconnect network connections.
d. Wait until the firmware update finishes successfully.

11 MAINTENANCE

11.1 PRODUCT MAINTENANCE



CAUTION

Mains Voltage

Risk of electric shock

a. Before you perform maintenance work on the device, disconnect the device from all poles.



NOTICE

Damage to the device and void of warranty

a. Do not use cleaning agents, disinfectants, alcohol, or agents with abrasive effect for cleaning.

Carry out the maintenance measures listed below on a regular basis. The frequency of cleaning depends on the environment in which you use the product. Damp or dirty environments may cause increased soiling and wear.

VISUAL INSPECTION

Check the following points before operating the device.

- **WARNING! Risk of electric shock.** Check mains power cables for damage or material fatigue.
- Check all air inlets and outlets for damage, dust, or dirt deposits.
- Check all outside screws and covers for corrosion, damage or excessive wear.
- Check all connectors and rubber sealing caps for damage, dust, or dirt deposits.
- **WARNING! Risk of falling objects.** Check that all screws, fasteners, and rigging points are securely tightened.

CLEANING

- Clean the surface with a clean and damp lint-free cotton cloth. Wipe off all excess moisture.
- **NOTICE! Do not use compressed air.** Clean any air inlets and outlets of dust and dirt deposits with a clean and damp lint-free cotton cloth.
- Clean all plug contacts from dust and dirt with a dry lint-free cotton cloth.
- Clean the front glass of your Cameo Lighting device on a monthly basis with a clean and damp lint-free cotton cloth dampened with a 1:1 solution of water and mild detergent. Do not use alcohol, solvents or abrasives.

REPLACING GOBOS

CAUTION! Gobos may only be replaced by skilled service personnel.

11.2 STORING THE DEVICE

Store the device only in a dry and clean environment. If you are storing the individual components of the device, use special protective covers, bags, and cases. Find such accessories for your product in the Adam Hall Shop (https://www.adamhall.com/shop).

12 REPAIR



CAUTION

Do not repair the device.

a. Repairs may only be carried out by specialist personnel authorised by the manufacturer.
b. If your device is damaged or requires service, contact the Adam Hall Customer Service.

13 DISPOSAL

13.1 PACKAGING DISPOSAL



1. You can feed the packaging into the reusable material cycle using the usual disposal methods.
2. Separate the packaging in accordance with the applicable disposal laws and recycling regulations in your country

13.2 DEVICE DISPOSAL



1. This device is subject to the European Directive on Waste Electrical and Electronic Equipment, as amended. WEEE Directive Waste Electrical and Electronic Equipment. Old appliances do not belong in the household waste. The old device must be disposed of via an approved disposal company or a municipal disposal facility. Observe the applicable regulations in your country.
2. Observe all disposal laws applicable in your country.
3. As a private customer, you can obtain information on environmentally friendly disposal options from the seller of the product or the appropriate regional authorities.
4. Retailers are often legally obliged to take back items free of charge.
5. Old appliances that contain harmful substances are labelled with the symbol of a crossed-out dustbin.
6. Current information on the collection rate can be found at the following website: *https://environment.ec.europa.eu/*. Search for the following term: waste-electrical-and-electronic-equipment-weee.

OPUS® SP6FC

Spot Profile Moving Head
DMX CONTROL TABLE



EN: After the adjustments have been made, set the value to 000 to avoid disturbance by endless function call.

DE: Nachdem die Einstellungen vorgenommen wurden, stellen Sie den Wert auf 000 ein, um Störungen durch endlosen Funktionsaufruf zu vermeiden.

FR: Une fois les ajustements effectués, réglez la valeur sur 000 pour éviter les perturbations par appel de fonction sans fin.

ES: Después de realizar los ajustes, establezca el valor en 000 para evitar perturbaciones mediante una llamada de función sin fin.

PL: Po dokonaniu ustawień ustaw wartość na 000, aby uniknąć zakłóceń przez niekończące się wywołanie funkcji.

IT: Dopo aver effettuato le regolazioni, impostare il valore su 000 per evitare disturbi causati da una chiamata a funzione infinita.

34CH Basic Channel	44CH Standard Channel	61CH Extended Channel	Function	Values	
1	1	1	Pan	000 - 255	0 % ... 100 %
2	2	2	Pan fine	000 - 255	
3	3	3	Tilt	000 - 255	0 % ... 100 %
4	4	4	Tilt fine	000 - 255	
5	5	5	Dimmer	000 - 255	0 % ... 100 %
	6	6	Dimmer fine	000 - 255	
6	7	7	Strobe Functions	000 - 005	Open
				006 - 010	Closed
				011 - 022	Ramp up/down slow to fast
				023 - 033	Ramp up/down random slow to fast
				034 - 045	Ramp up slow to fast
				046 - 056	Ramp up random slow to fast
				057 - 068	Ramp down slow to fast
				069 - 079	Ramp down random slow to fast
				080 - 102	Random strobe effect slow to fast
				103 - 127	Strobe break effect 5 s ... 1 s (short burst with break)
				128 - 250	Strobe slow to fast (< 1 Hz ... 20 Hz)
				251 - 255	Open
7	8	8	Red	000 - 255	0 % ... 100 %
	9	9	Red fine	000 - 255	
8	10	10	Green	000 - 255	0 % ... 100 %
	11	11	Green fine	000 - 255	
9	12	12	Blue	000 - 255	0 % ... 100 %
	13	13	Blue fine	000 - 255	
		14	Amber	000 - 255	0 % ... 100 %
		15	Amber fine	000 - 255	

OPUS® SP6FC

Spot Profile Moving Head
DMX CONTROL TABLE

		16	Lime	000	-	255	0 % ... 100 %
		17	Lime fine	000	-	255	
		18	Cyan	000	-	255	0 % ... 100 %
		19	Cyan fine	000	-	255	
10	**14**	**20**	CCT	000	-	005	Off
				006	-	006	Warm White
				007	-	046	Warm White to 2700 K
				047	-	047	Bulb White (2700 K)
				048	-	087	2700 K ... 3200 K
				088	-	088	Halogen White (3200 K)
				089	-	128	3200 K ... 4000 K
				129	-	129	Neutral White (4000 K)
				130	-	169	4000K ... 5600 K
				170	-	170	Studio White (5600 K)
				171	-	210	5600K ... 6500 K
				211	-	211	Daylight White (6500 K)
				212	-	251	6500 K ... Cold White
				252	-	255	Cold White
11	**15**	**21**	Tint	000	-	000	Off
				001	-	127	Magenta -> neutral
				128	-	128	Neutral
				129	-	255	Neutral -> green
				000	-	005	No function
				006	-	009	46 Dark Magenta
				010	-	013	29 Plasa Red
				014	-	017	26 Bright Red
				018	-	021	127 Smokey Pink
				022	-	025	36 Medium Pink
				026	-	029	19 Fire
				030	-	033	135 Deep Golden Amber
				034	-	037	778 Millennium Gold
				038	-	041	21 Gold Amber
				042	-	045	157 Pink
				046	-	049	110 Middle Rose
				050	-	053	109 Light Salmon
				054	-	057	35 Light Pink
				058	-	061	134 Golden Amber
				062	-	065	17 Surprise Peach
				066	-	069	746 Brown
				070	-	073	105 Orange
				074	-	077	20 Medium Amber
				078	-	081	768 Egg Yolk Yellow
				082	-	085	15 Deep Straw
				086	-	089	767 Nectarine
				090	-	093	101 Yellow

OPUS® SP6FC

Spot Profile Moving Head
DMX CONTROL TABLE

	16	**22**	Color Presets	094	-	097	100 Spring Yellow
				098	-	101	88 Lime Green
				102	-	105	121 LEE Green
				106	-	109	738 Jas Green
				110	-	113	89 Moss Green
				114	-	117	139 Primary Green
				118	-	121	124 Dark Green
				122	-	125	323 Jade
				126	-	129	354 Special Steel Blue
				130	-	133	116 Medium Blue-Green
				134	-	137	183 Moonlight Blue
				138	-	141	132 Medium Blue
				142	-	145	119 Dark Blue
				146	-	149	716 Mikkel Blue
				150	-	153	71 Tokyo Blue
				154	-	157	181 Congo Blue
				158	-	161	799 Special KH Lavender
				162	-	165	707 Ultimate Violet
				166	-	169	343 Special Medium Lavender
				170	-	173	798 Chrysalis Pink
				174	-	177	701 Provence
				178	-	181	797 Deep Purple
				182	-	185	48 Rose Purple
				186	-	189	345 Fuchsia Pink
				190	-	193	795 Magical Magenta
				194	-	197	128 Bright Pink
				198	-	201	2 Rose Pink
				202	-	255	No function
	17	**23**	Color Preset Crossfade	000	-	005	0 s (off)
				006	-	105	0.1 s ... 10 s (0.1 s steps)
				106	-	214	11 s ... 119 s (1 s steps)
				215	-	244	2 m ... 4 m 50 s (10 s steps)
				245	-	255	5 m ... 15 m (1 m steps)
				000	-	005	Open
				006	-	021	Open -> Gobo1
				022	-	022	Gobo 1
				023	-	038	Gobo 1 -> Gobo 2
				039	-	039	Gobo 2
				040	-	055	Gobo 2 -> Gobo 3
				056	-	056	Gobo 3
				057	-	072	Gobo 3 -> Gobo 4
				073	-	073	Gobo 4
				074	-	089	Gobo 4 -> Gobo 5
				090	-	090	Gobo 5
				091	-	106	Gobo 5 -> Gobo 6

OPUS® SP6FC

Spot Profile Moving Head
DMX CONTROL TABLE

12	**18**	**24**	Gobo Wheel 1	107	-	107	Gobo 6
				108	-	123	Gobo 6 -> Gobo 7
				124	-	124	Gobo 7
				125	-	140	Gobo 7 -> Open
				141	-	142	Open
				143	-	149	Gobo 1 shake (slow -> fast)
				150	-	156	Gobo 2 shake (slow -> fast)
				157	-	163	Gobo 3 shake (slow -> fast)
				164	-	170	Gobo 4 shake (slow -> fast)
				171	-	177	Gobo 5 shake (slow -> fast)
				178	-	184	Gobo 6 shake (slow -> fast)
				185	-	191	Gobo 7 shake (slow -> fast)
				192	-	192	Open
				193	-	223	Gobo Wheel rotation fast to slow
				224	-	224	Gobo Wheel rotation Stop
				225	-	255	Gobo Wheel rotation slow to fast (backwards)
13	**19**	**25**	Gobo Wheel 1 Gobo Position	000	-	128	Gobo Position 0° ... 540°
				129	-	191	Gobo Rotation fast to slow
				192	-	192	Gobo Rotation Stop
				193	-	255	Gobo Rotation slow to fast (backwards)
	20	**26**	Gobo Wheel 1 Gobo Position fine	000	-	255	Gobo Position fine
14	**21**	**27**	Gobo Wheel 2	000	-	005	Open
				006	-	019	Open -> Gobo1
				020	-	020	Gobo 1
				021	-	034	Gobo 1 -> Gobo 2
				035	-	035	Gobo 2
				036	-	049	Gobo 2 -> Gobo 3
				050	-	050	Gobo 3
				051	-	064	Gobo 3 -> Gobo 4
				065	-	065	Gobo 4
				066	-	079	Gobo 4 -> Gobo 5
				080	-	080	Gobo 5
				081	-	094	Gobo 5 -> Gobo 6
				095	-	095	Gobo 6
				096	-	109	Gobo 6 -> Gobo 7
				110	-	110	Gobo 7
				111	-	124	Gobo 7 -> Gobo 8
				125	-	125	Gobo 8
				126	-	139	Gobo 8 -> Open
				140	-	140	Open
				141	-	146	Gobo 1 Shake (slow -> fast)
				147	-	152	Gobo 2 Shake (slow -> fast)
				153	-	158	Gobo 3 Shake (slow -> fast)
				159	-	164	Gobo 4 Shake (slow -> fast)

OPUS® SP6FC

Spot Profile Moving Head
DMX CONTROL TABLE

				165	-	170	Gobo 5 Shake (slow -> fast)
				171	-	176	Gobo 6 Shake (slow -> fast)
				177	-	182	Gobo 7 Shake (slow -> fast)
				183	-	188	Gobo 8 Shake (slow -> fast)
				189	-	192	Open
				193	-	223	Gobo wheel rotation fast to slow
				224	-	224	Gobo wheel rotation stop
				225	-	255	Gobo wheel rotation slow to fast (backwards)
15	**22**	**28**	Zoom	000	-	255	Narrow to wide
		29	Zoom fine	000	-	255	
16	**23**	**30**	Focus	000	-	255	0 % ... 100 %
	24	**31**	Focus fine	000	-	255	
	25	**32**	Auto Focus	000	-	005	No function
				006	-	036	3 m
				037	-	067	5 m
				068	-	098	10 m
				099	-	129	15 m
				130	-	160	20 m
				161	-	191	30 m
				192	-	222	50 m
				223	-	255	100 m
	26	**33**	Auto Focus Adjust	000	-	255	Auto focus adjustment
17	**27**	**34**	Iris	000	-	191	Open to close
				192	-	200	Pulse slow to fast (with dim)
				201	-	209	Pulse slow to fast (without dim)
				210	-	218	Pulse random slow to fast (without dim)
				219	-	227	Ramp up slow to fast (with dim)
				228	-	236	Ramp up slow to fast (without dim)
				237	-	245	Ramp down slow to fast (with dim)
				246	-	255	Ramp down slow to fast (without dim)
18	**28**	**35**	Prism Selection	000	-	005	Prism off (open)
				006	-	088	5 x circular prism
				089	-	171	8 x circular prism
				172	-	255	5 x circular & 8 x circular prism
19	**29**	**36**	Prism 1 (5x circular)	000	-	128	Prism position 0° ... 540°
				129	-	191	Prism rotation fast to slow
				192	-	192	Prism rotation stop
				193	-	255	Prism rotation slow to fast (backwards)
20	**30**	**37**	Prism 2 (8x circular)	000	-	128	Prism position 0° ... 540°
				129	-	191	Prism rotation fast to slow
				192	-	192	Prism rotation stop
				193	-	255	Prism rotation slow to fast (backwards)
21	**31**	**38**	Frost Light	000	-	255	0 % ... 100 %
22	**32**	**39**	Frost Heavy	000	-	255	0 % ... 100 %
23	**33**	**40**	Animation Wheel	000	-	255	Animation wheel in 0 % ... 100 %

OPUS® SP6FC

Spot Profile Moving Head
DMX CONTROL TABLE

24	34	41	Animation Wheel Rotation	000 - 128	Animation wheel position 0° ... 540°
				129 - 191	Animation wheel rotation fast to slow
				192 - 192	Animation wheel rotation stop
				193 - 255	Animation wheel rotation slow to fast (backwards)
25	35	42	Blade 1A	000 - 255	0 % ... 100 %
		43	Blade 1A fine	000 - 255	
26	36	44	Blade 1B	000 - 255	0 % ... 100 %
		45	Blade 1B fine	000 - 255	
27	37	46	Blade 2A	000 - 255	0 % ... 100 %
		47	Blade 2A fine	000 - 255	
28	38	48	Blade 2B	000 - 255	0 % ... 100 %
		49	Blade 2B fine	000 - 255	
29	39	50	Blade 3A	000 - 255	0 % ... 100 %
		51	Blade 3A fine	000 - 255	
30	40	52	Blade 3B	000 - 255	0 % ... 100 %
		53	Blade 3B fine	000 - 255	
31	41	54	Blade 4A	000 - 255	0 % ... 100 %
		55	Blade 4A fine	000 - 255	
32	42	56	Blade 4B	000 - 255	0 % ... 100 %
		57	Blade 4B fine	000 - 255	
33	43	58	Shape Rotation	000 - 255	0 % ... 100 %
		59	Shape Rotation fine	000 - 255	
				000 - 005	No function
				006 - 006	No function
				007 - 007	Dimmer curve linear
				008 - 008	Dimmer curve exponential
				009 - 009	Dimmer curve logarithmic
				010 - 010	Dimmer curve S-curve
				011 - 011	Dimmer curve halogen
				012 - 016	Spare
				017 - 017	No function
				018 - 018	PWM 650 Hz
				019 - 019	PWM 1530 Hz
				020 - 020	PWM 3600 Hz
				021 - 021	PWM 12 kHz
				022 - 022	PWM 18.9 kHz
				023 - 023	PWM 25 kHz
				024 - 028	Spare
				029 - 029	Dimmer response LED
				030 - 030	Halogen 1 kW
				031 - 031	Halogen 2 kW
				032 - 032	Halogen 5 kW
				033 - 037	Spare
				038 - 038	DTW (redshift) on
				039 - 039	DTW (redshift) off

OPUS® SP6FC

Spot Profile Moving Head
DMX CONTROL TABLE

040	-	044	Spare
045	-	045	No function
046	-	046	Brightness optimisation mode
047	-	047	Quality optimisation mode
048	-	048	No function
049	-	049	No function
050	-	050	No function
051	-	051	Disabled optimisation mode
052	-	056	Spare
057	-	057	Native colour space
058	-	058	sRGB colour space
059	-	059	DCI P3 colour space
060	-	060	Adobe RGB colour space
061	-	061	REC2020 colour space
062	-	066	Spare
067	-	067	White point by colour space
068	-	068	White point 6500 K
069	-	069	White point 5600 K
070	-	070	White point 4000 K
071	-	071	White point 3200 K
072	-	072	White point 2700 K
073	-	077	Spare
078	-	078	CCT fade constant brightness
079	-	079	CCT fade maximum brightness
080	-	084	Spare
085	-	085	No function
086	-	086	Fan auto
087	-	087	Fan off
088	-	088	Fan constant low
089	-	089	Fan constant mid
090	-	090	Fan constant high
091	-	095	Spare
096	-	096	No function
097	-	097	Invert pan on
098	-	098	Invert pan off
099	-	099	Invert tilt on
100	-	100	Invert tilt off
101	-	101	Pan angle 540°
102	-	102	Pan angle 630°
103	-	103	Position feedback on
104	-	104	Position feedback off
105	-	105	Blackout while P/T moving on
106	-	106	Blackout while P/T moving off
107	-	107	Silent movement on
108	-	108	Silent movement off

OPUS® SP6FC

Spot Profile Moving Head
DMX CONTROL TABLE

34	44	60	Device settings (hold value for 3 seconds)	109	-	109	Motor reset fast
				110	-	110	Motor reset normal
				111	-	111	No function
				112	-	112	No function
				113	-	117	Spare
				118	-	118	No function
				119	-	119	Gobo wheel shortest way
				120	-	120	Gobo wheel clockwise
				121	-	121	Gobo wheel snap
				122	-	122	Gobo wheel scroll
				123	-	123	Gobo colour correction on
				124	-	124	Gobo colour correction off
				125	-	129	Spare
				130	-	130	No function
				131	-	131	No function
				132	-	132	No function
				133	-	133	No function
				134	-	138	Spare
				139	-	139	Blackout while wheels moving on
				140	-	140	Blackout while wheels moving off
				141	-	141	Framing control left & right
				142	-	142	Framing control position & angle
				143	-	147	Spare
				148	-	148	No function
				149	-	149	No function
				150	-	150	No function
				151	-	151	Sleep mode on
				152	-	152	Sleep mode off/wake up
				153	-	157	Spare
				158	-	158	No function
				159	-	159	No function
				160	-	160	No function
				161	-	161	No function
				162	-	162	No function
				163	-	167	Spare
				168	-	168	No function
				169	-	169	Display always on
				170	-	170	Display off after 20 s
				171	-	171	Display lock on
				172	-	172	Display lock off
				173	-	177	Spare
				178	-	178	No function
				179	-	179	Power mode normal
				180	-	180	Power mode constant
				181	-	181	No function

OPUS® SP6FC

Spot Profile Moving Head
DMX CONTROL TABLE

				182	-	182	Power mode framing constant
				183	-	187	Spare
				188	-	188	No function
				189	-	189	No function
				190	-	190	No function
				191	-	191	No function
				192	-	192	No function
				193	-	197	Spare
				198	-	198	No function
				199	-	199	Store user default A
				200	-	200	Store user default B
				201	-	201	Store user default C
				202	-	202	Load factory defaults
				203	-	203	Load user default A
				204	-	204	Load user default B
				205	-	205	Load user default C
				206	-	210	Spare
				211	-	211	No function
				212	-	212	Reset pan / tilt
				213	-	213	Reset head
				214	-	214	No function
				215	-	215	Reset Gobo/animation
				216	-	216	Reset zoom/focus
				217	-	217	Reset framing/iris
				218	-	218	Reset prism/frost
				219	-	219	Reset all
				220	-	224	Spare
				225	-	225	No function
				226	-	226	Record user colour/user scene 1
				227	-	227	Record user colour/user scene 2
				228	-	228	Record user colour/user scene 3
				229	-	229	Record user colour/user scene 4
				230	-	230	Record user colour/user scene 5
				231	-	231	Record user colour/user scene 6
				232	-	232	Record user colour/user scene 7
				233	-	233	Record user colour/user scene 8
				234	-	238	Spare
				239	-	239	No function
				240	-	244	Spare
				245	-	249	Spare
				250	-	254	Spare
				255	-	255	No function
				000	-	005	Read from menu
				006	-	011	Auto
				012	-	017	Off

		61	Fan Control	018	-	023	Constant low
				024	-	029	Constant medium
				030	-	035	Constant high
				036	-	154	Spare - read from menu
				155	-	255	Manual mode from 0 % ... 100 %

INDEX

A

Accessories 16
Art-Net 37

C

Cleaning 47
Connecting
  Power supply 28
Customer Service 7

D

Disconnecting power supply 28
DMX
  Start address 30
  Technology 20
Download 7

M

Mains power cable 28

N

Navigating 29
Network 37

O

Omega bracket 25
Optional accessories 16

P

Power supply 28
powerCON® 28

Q

Quicklight 34

S

Slave mode 32
Stand-alone mode 32
Storing 47
Submenu
  Art-Net 37
  Dimmer 39
  Display 42
  Fan 40
  Movement 40
  Network sACN 37
  Signal fail 41
  Stand-alone 37
  Wireless 38

cameo